ARTRYS
PROJEKT

SUBFRAME SYSTEMS FOR
VENTILATED FACADES

PRODUCT CATALOGUE
2020

Table of contents

Masto Wola
Jana Kazimierza, Warszawa

About Us

ARTRYS PROJEKT - innovative company specialising in design and supervision services as well as comprehensive installation of ventilated facades .
The company offers technical consultancy and panel fabricating services as well.

ARTRYS PROJEKT has been on the market since 2009 and is building its position on the many years of international experience of its founders, graduates of the department of Civil Engineering in the Warsaw University of Technology.

The main goals of the company were to provide comprehensive installation services, from compliance with the design to supervision of the installation quality. Our constant pursuit of higher standards has allowed us to work with a number of prestigious partners in the building sector. Our customers are investors, general contractors and installation companies that value high quality materials and modern ventilated facades.

Artrys Projekt:

- Professional contractor of over 250 ventilated facade projects covering a total area of over 330 thousand square meters.
- Team of engineers consisting of over 20 experienced specialists.
- A dynamic network of installation teams, completing around 40 thousand square meters of high quality ventilated facades annually.
- Manufacturer of ARTRYS BRACKETS subframe and a wide range of elements for multiple fixing systems for cladding panels.
- Trustworthy business partner cooperating with leading general contractors, cladding panel manufacturers, distributors and other manufacturers.
- High quality response to customers' needs, innovative, and safe building solutions.

VENTILATED FACADES

Ventilated facades are an ideal solution for modern and energy efficient buildings. One of their characteristics is a ventilation gap between the insulation layer and exterior cladding panel fixed to the load bearing structure. The gap allows for the free CIRCULATION of air and systematic ventilation of all elements and materials. The wide range of subframe systems enables a variety of cladding panels such as: fibre-cement, concrete, HPL, ceramic, ACP, aluminium and steel cassettes, aluminium louvers to be installed. The final result is aesthetically pleasing and far better-looking than standard plaster facades.

Advantages of Ventilated Facades:

- Visual effect
- Thermal insulation
- Sound proofing
- Fire resistance
- Durability
- Easy maintenance
- Constant ventilation of cladding panels and insulation
- Year-round installation

SYMBOLS:

Tested at universities, technical universities and institutes other than ITB.

Strength tests. Material fatigue tests.

Fire resistance classification. Tested in accordance with §225.

National Technical Evaluation.

Tested IN/BY ITB

Passive system.

Corrosion resistance tests. Made of corrosion resistant material.

Tested in accordance with European norms. Tested by accredited institute.

Apartamenty Marymont
Warszawa

RAINSCREEN SUBFRAME SYSTEMS

ARTRYS offers a wide range of specialised systems designed with modern facades in mind. Brackets and aluminium profiles serve as the base of the system and are designed to easily level out any unevenness of the wall (thanks to 30 mm adjustment of the profile). We offer three types of brackets: aluminium, stainless steel and passive (made of two aluminium pieces connected with a plastic insert). Each bracket comes in two sizes:

ARTRYS BRACKET LARGE

Large brackets (with BL marking) bear the weight of the panel and substructure as well as resist wind forces. They are used to fix the profiles so they are unable to slide – the so-called FIX connection. They can be used as sliding brackets (LOS connection/) in case of greater outreaches.

ARTRYS BRACKET MEDIUM

Medium brackets (with BM marking) resist wind forces. They are used to fix the profiles so they can slide - so called LOS connection. They can be used as sliding brackets (LOS connection/) in case of smaller outreaches.

ARTRYS systems have been tested multiple times in The Institute of Building Technology in mechanical, fire and thermal tests. In order to ensure the compatibility of our products with cladding panels available on the market we are constantly conducting tests with leading manufacturers in accredited institutes.

All of our brackets meet the requirements for fire protection in accordance with §225 of the Regulation of the Minister of Infrastructure. They have been tested with multiple cladding panels as part of the complete assembly. The range of opinions issued by ITB proves this.

The impact of each bracket on the value of the heat- transfer coefficient of the external partition has been tested in the Department of Thermal Physics (Raport no. 02550/16/Z00NZF). According to the requirements and conditions for external walls it should not be higher than 0,23 W/m*K from 2017 and not exceed 0,20 W/m*K from 2021.

INCREASING THERMAL REQUIREMENTS

Requirements regarding energy efficiency of buildings are becoming stricter each year. In 2021 the heat transfer coefficient of exterior partitions will have to be 0,20 W/m2K or lower. This is a challenge for manufacturers and rainscreen installers .

Aluminium and steel subframes, which are necessary for fixing cladding panels, significantly contribute to the so-called "thermal bridges" phenomenon and heat loss. Architects, engineers and installers have been dealing with this problem for years.

Artrys Projekt developed an innovative passive system consisting of a non-metal insert in the bracket. This stops the thermal bridge in the insulation layer, prevents heat loss, and positively impacts energy efficiency parameters of a building.

The complete passive system has been tested BY the ITB and covered with National Technical Evaluation no. ITB-KOT--2018/0486. An additional range of fire tests have been performed in accordance with §225 of the Regulation of the Minister of Infrastructure.

Requirements regarding the heat transfer coefficient value for exterior partitions [W/(m2*K)]

Date	From 2017	From 2021
Required value	≤ 0,23	≤ 0,20

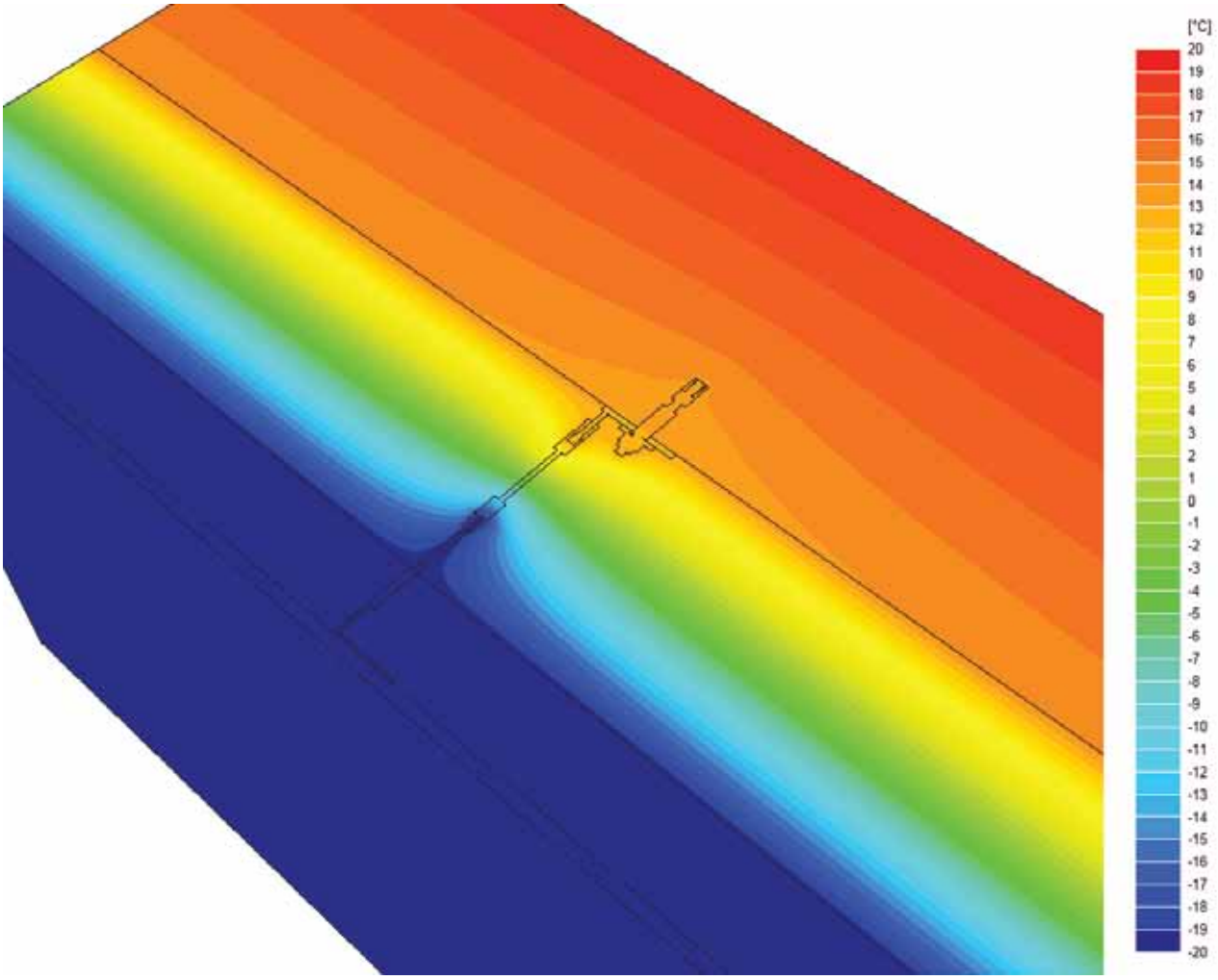

ARTRYS PASSIVE BRACKETS

The table below presents values of the heat transfer coefficient for three different wall types and insulation thicknesses. The value for Artrys passive brackets is low enough (third decimal place) to meet strict requirements.

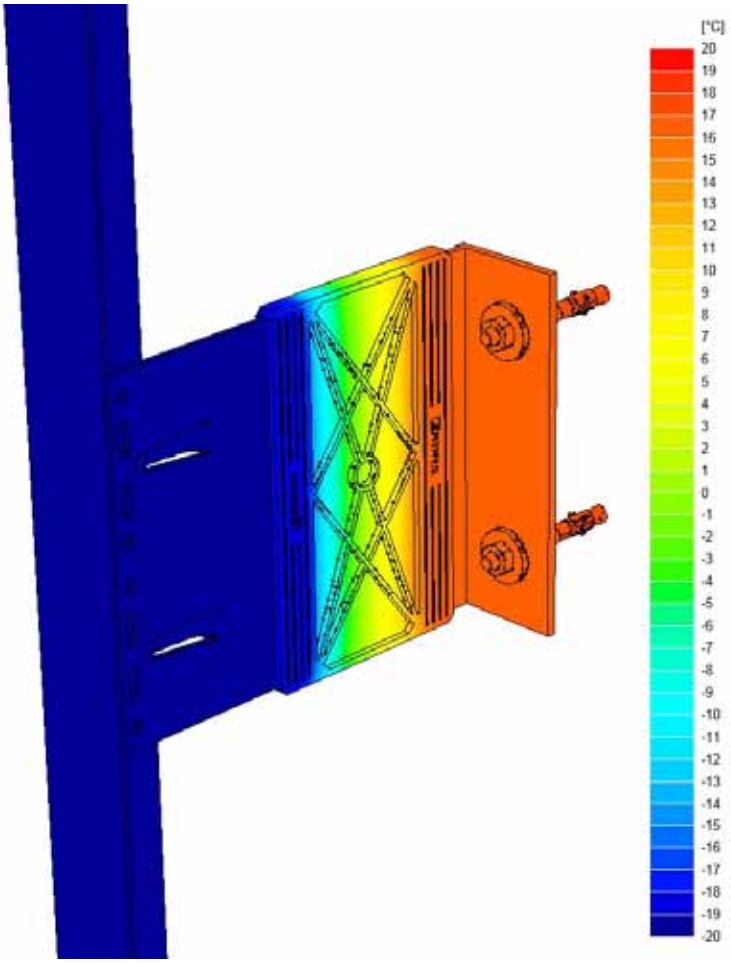

WALL	Thickness of insulation - mm	Heat transfer coefficient [W/(m^2 * K)]		
		WALL	BMP bracket	BLP bracket
CONCRETE	150	≤ 0,217	≤ 0,002	≤ 0,003
	180	≤ 0,183	≤ 0,003	≤ 0,004
	200	≤ 0,166	≤ 0,004	≤ 0,006
BRICK WALL	150	≤ 0,211	≤ 0,002	≤ 0,003
	180	≤ 0,179	≤ 0,002	≤ 0,004
	200	≤ 0,162	≤ 0,004	≤ 0,006
POROTHERM	150	≤ 0,198	≤ 0,001	≤ 0,002
	180	≤ 0,169	≤ 0,002	≤ 0,003
	200	≤ 0,154	≤ 0,003	≤ 0,005

PASSIVE BRACKETS

FASTENING SYSTEMS FOR VENTILATED FACADES

Passive brackets are the flagship product of Artrys Projekt. Made of both aluminium and plastic elements, the brackets have outstanding insulation parameters and practically eliminate the thermal bridge phenomenon. The strength and durability of the plastic insert are improved by its special ribbing and the use of fibre-glass.

The brackets have to be used with PVC washers or PES tape to separate the aluminium element from the wall. Both sizes (BL and BM) come in various lengths from 180 to 280 mm (in 20 mm increments). 260 and 280 mm long brackets come only in large sizes (BLP) but are still used as FIX and LOS points.

The newest addition to the passive range are brackets with a V0 mark. The plastic element used in production of these is made of of flame retardant material which results in improved fire resistance .

Centrum Praskie Koneser
Warszawa

ARTRYS BRACKET LARGE PASSIVE - BLP X

PASSIVE BRACKETS

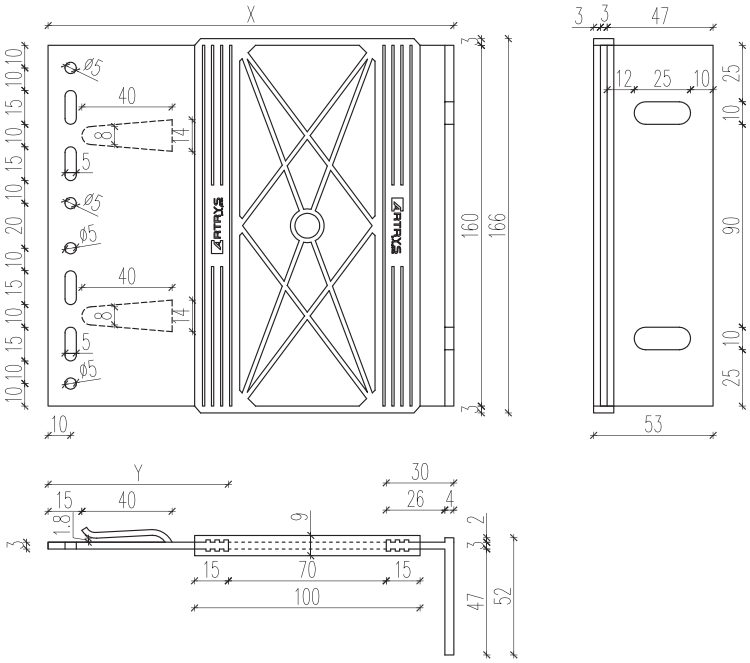

BRACKET TYPE	X [mm]	Y [mm]
ARTRYS BRACKET LARGE PASSIVE - BLP 180	180	80
ARTRYS BRACKET LARGE PASSIVE - BLP 200	200	100

Material:
ALUMINIUM EN AW 6060 T6
POLYAMIDE PA66 GF50 OR PA6 GF40 FR V0

ARTRYS BRACKET MEDIUM PASSIVE - BMP X

PASSIVE BRACKETS

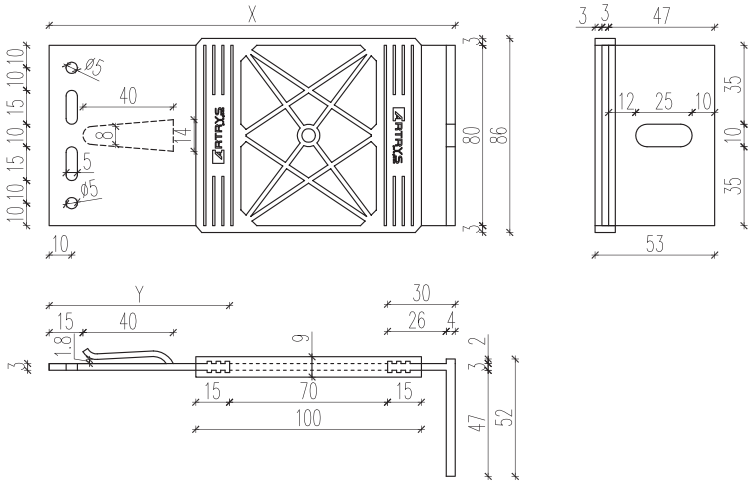

BRACKET TYPE	X [mm]	Y [mm]
ARTRYS BRACKET MEDIUM PASSIVE - BMP 180	180	80
ARTRYS BRACKET MEDIUM PASSIVE - BMP 200	200	100

Material:
ALUMINIUM EN AW 6060 T6
POLYAMIDE PA66 GF50 OR PA6 GF40 FR V0

ARTRYS BRACKET LARGE PASSIVE - BLP X

PASSIVE BRACKETS

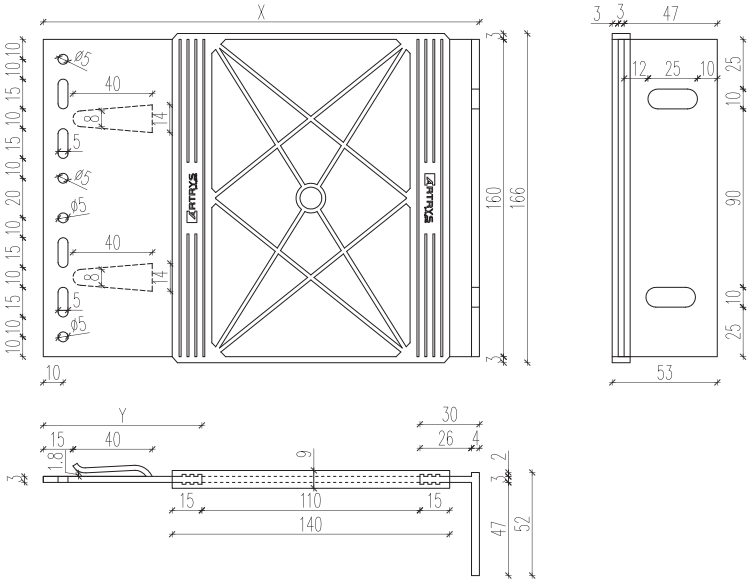

BRACKET TYPE	X [mm]	Y [mm]
ARTRYS BRACKET LARGE PASSIVE - BLP 220	220	80
ARTRYS BRACKET LARGE PASSIVE - BLP 240	240	100

Material:

ALUMINIUM EN AW 6060 T6

POLYAMIDE PA66 GF50 OR PA6 GF40 FR V0

ARTRYS BRACKET MEDIUM PASSIVE - BMP X

PASSIVE BRACKETS

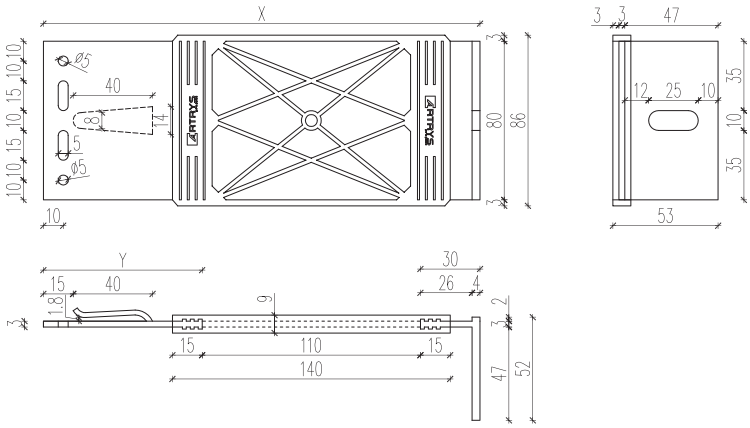

BRACKET TYPE	X [mm]	Y [mm]
ARTRYS BRACKET MEDIUM PASSIVE - BMP 220	220	80
ARTRYS BRACKET MEDIUM PASSIVE - BMP 240	240	100

Material:

ALUMINIUM EN AW 6060 T6

POLYAMIDE PA66 GF50 OR PA6 GF40 FR V0

ARTRYS BRACKET LARGE PASSIVE - BLP X

PASSIVE BRACKETS

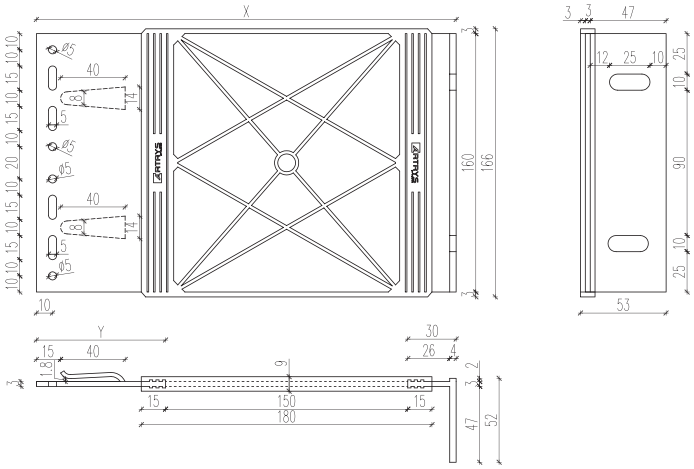

BRACKET TYPE	X [mm]	Y [mm]
ARTRYS BRACKET LARGE PASSIVE - BLP 260	260	80
ARTRYS BRACKET LARGE PASSIVE - BLP 280	280	100

Material:

ALUMINIUM EN AW 6060 T6

POLYAMIDE PA66 GF50 OR PA6 GF40 FR V0

ARTRYS BRACKET LARGE PASSIVE - BLP 160

PASSIVE BRACKETS

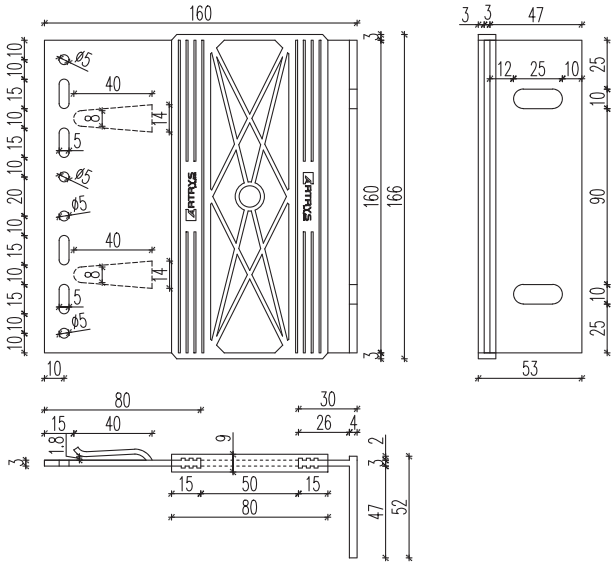

BRACKET TYPE

ARTRYS BRACKET LARGE PASSIVE - BLP 160

Material:

ALUMINIUM EN AW 6060 T6

POLYAMIDE PA66 GF50 OR PA6 GF40 FR V0

ARTRYS BRACKET MEDIUM PASSIVE - BMP 160

PASSIVE BRACKETS

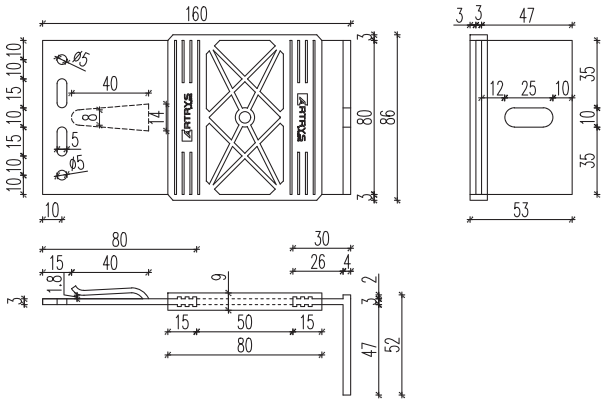

BRACKET TYPE

ARTRYS BRACKET MEDIUM PASSIVE - BMP 160

Materiał:

ALUMINIUM EN AW 6060 T6

TWORZYWO POLIAMID PA66 GF50 lub PA6 GF40 FR V0

ALUMINIUM BRACKETS

FASTENING SYSTEMS FOR VENTILATED FACADES

Aluminium brackets are the standard solution. They are easy to install, highly resistant to corrosion and can be modified on site. In order to reduce thermal bridges and avoid direct connection with the wall they should be used together with our PVC washers. Both sizes (BL and BM) come in various lengths from 60 to 240 mm (in 20 mm increments).

Osiedle Forma
Warszawa

ARTRYS BRACKET LARGE NEW - BLN X

ALUMINIUM BRACKETS

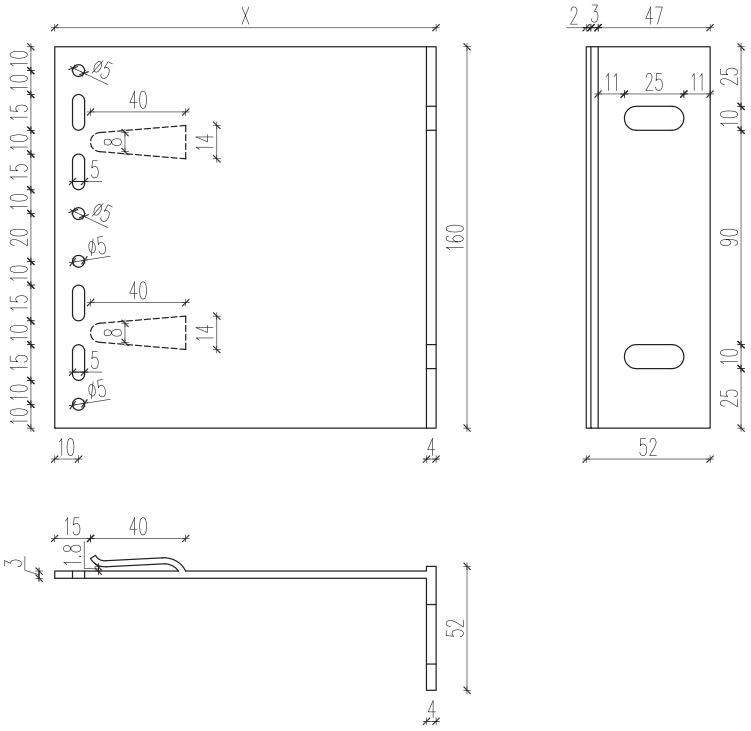

BRACKET TYPE	X [mm]
ARTRYS BRACKET LARGE NEW - BLN 240	240
ARTRYS BRACKET LARGE NEW - BLN 220	220
ARTRYS BRACKET LARGE NEW - BLN 200	200
ARTRYS BRACKET LARGE NEW - BLN 180	180
ARTRYS BRACKET LARGE NEW - BLN 160	160
ARTRYS BRACKET LARGE NEW - BLN 140	140
ARTRYS BRACKET LARGE NEW - BLN 120	120
ARTRYS BRACKET LARGE NEW - BLN 100	100
ARTRYS BRACKET LARGE NEW - BLN 80	80
ARTRYS BRACKET LARGE NEW - BLN 60	60

Material:

ALUMINIUM EN AW 6060 T6

ARTRYS BRACKET MEDIUM NEW - BMN X

ALUMINIUM BRACKETS

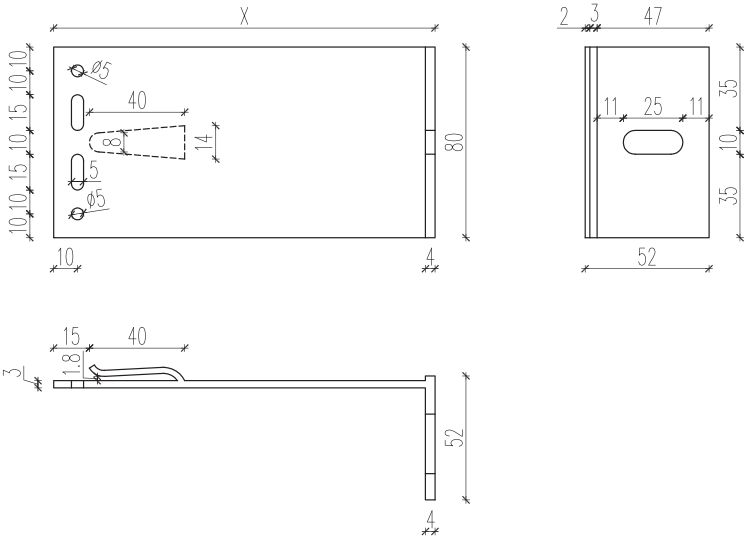

BRACKET TYPE	X [mm]
ARTRYS BRACKET MEDIUM NEW - BMN 240	240
ARTRYS BRACKET MEDIUM NEW - BMN 220	220
ARTRYS BRACKET MEDIUM NEW - BMN 200	200
ARTRYS BRACKET MEDIUM NEW - BMN 180	180
ARTRYS BRACKET MEDIUM NEW - BMN 160	160
ARTRYS BRACKET MEDIUM NEW - BMN 140	140
ARTRYS BRACKET MEDIUM NEW - BMN 120	120
ARTRYS BRACKET MEDIUM NEW - BMN 100	100
ARTRYS BRACKET MEDIUM NEW - BMN 80	80
ARTRYS BRACKET MEDIUM NEW - BMN 60	60

Material:

ALUMINIUM EN AW 6060 T6

STAINLESS STEEL BRACKETS

FASTENING SYSTEMS FOR VENTILATED FACADES

Stainless steel brackets are used for larger loads. Similar to aluminium brackets, they are highly resistant to corrosion but also maintain a lower thermal conductivity coefficient and improve overall thermal performance of the external partition. Because of these two factors, they can be installed without PVC washers. Both sizes (BL and BM) come in various lengths from 60 to 300 mm (in 20 mm increments).

Osiedle Awangarda
Warszawa

ARTRYS BRACKET LARGE STAINLESS - BLS X

STAINLESS STEEL BRACKETS

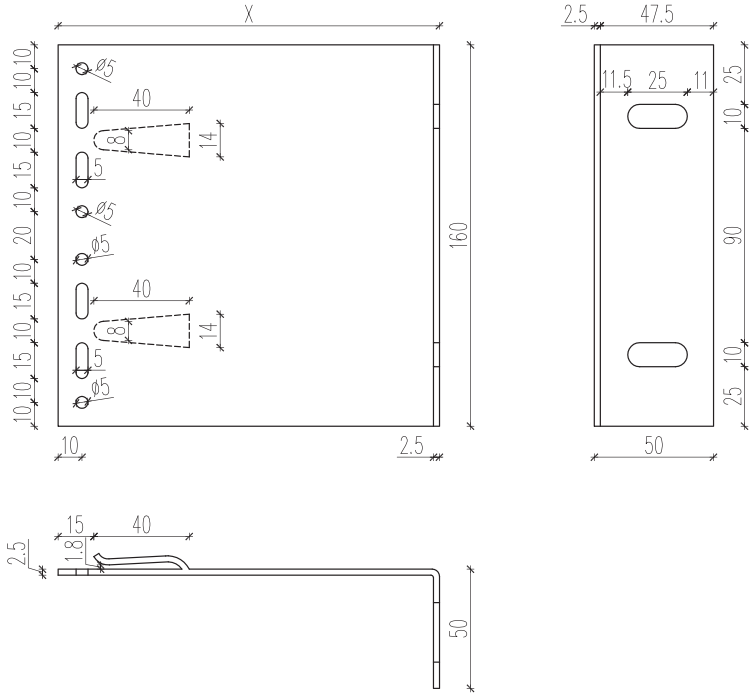

BRACKET TYPE	X [mm]
ARTRYS BRACKET LARGE STAINLESS - BLS 300	300
ARTRYS BRACKET LARGE STAINLESS - BLS 280	280
ARTRYS BRACKET LARGE STAINLESS - BLS 260	260
ARTRYS BRACKET LARGE STAINLESS - BLS 240	240
ARTRYS BRACKET LARGE STAINLESS - BLS 220	220
ARTRYS BRACKET LARGE STAINLESS - BLS 200	200
ARTRYS BRACKET LARGE STAINLESS - BLS 180	180
ARTRYS BRACKET LARGE STAINLESS - BLS 160	160
ARTRYS BRACKET LARGE STAINLESS - BLS 140	140
ARTRYS BRACKET LARGE STAINLESS - BLS 120	120
ARTRYS BRACKET LARGE STAINLESS - BLS 100	100
ARTRYS BRACKET LARGE STAINLESS - BLS 80	80
ARTRYS BRACKET LARGE STAINLESS - BLS 60	60

Material:

STAINLESS STEEL 1.4404/2B (316) lub 1.4301/2B (304)

ARTRYS BRACKET MEDIUM STAINLESS - BMS X

STAINLESS STEEL BRACKETS

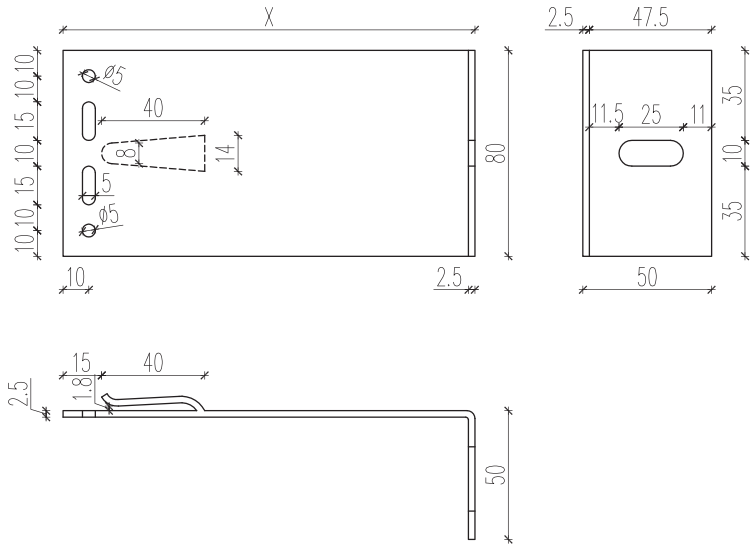

BRACKET TYPE	X [mm]
ARTRYS BRACKET MEDIUM STAINLESS - BMS 300	300
ARTRYS BRACKET MEDIUM STAINLESS - BMS 280	280
ARTRYS BRACKET MEDIUM STAINLESS - BMS 260	260
ARTRYS BRACKET MEDIUM STAINLESS - BMS 240	240
ARTRYS BRACKET MEDIUM STAINLESS - BMS 220	220
ARTRYS BRACKET MEDIUM STAINLESS - BMS 200	200
ARTRYS BRACKET MEDIUM STAINLESS - BMS 180	180
ARTRYS BRACKET MEDIUM STAINLESS - BMS 160	160
ARTRYS BRACKET MEDIUM STAINLESS - BMS 140	140
ARTRYS BRACKET MEDIUM STAINLESS - BMS 120	120
ARTRYS BRACKET MEDIUM STAINLESS - BMS 100	100
ARTRYS BRACKET MEDIUM STAINLESS - BMS 80	80
ARTRYS BRACKET MEDIUM STAINLESS - BMS 60	60

Material:

STAINLESS STEEL 1.4404/2B (316) lub 1.4301/2B (304)

ALUMINIUM EXTENSIONS

FASTENING SYSTEMS FOR VENTILATED FACADES

The aluminium extension piece can be used with any bracket to extend its outreach or allow installers to deal with even greater unevenness of the wall. This product proved to be very useful for different types of ceilings. Non-standard lengths of extensions are available upon request.

sPLACE
Warszawa

ARTRYS EXTENSION LARGE - EL 100

ALUMINIUM EXTENSIONS

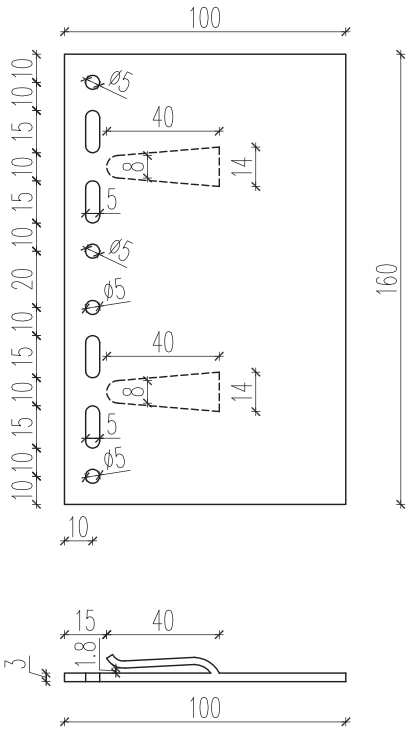

Material:

ALUMINIUM EN AW 6060 T6

ARTRYS EXTENSION MEDIUM - EM 100

ALUMINIUM EXTENSIONS

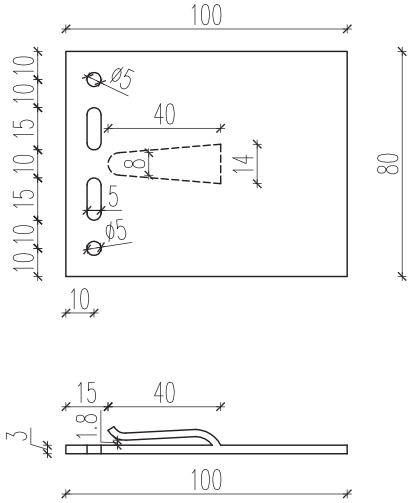

Material:

ALUMINIUM EN AW 6060 T6

THERMOSTOPS

FASTENING SYSTEMS FOR VENTILATED FACADES

Thermostops (PVC washers) have a low thermal conductivity coefficient and improve overall performance of the whole assembly. They are optional for stainless steel brackets but are a necessity when aluminium brackets are installed as they prevent electrolytic corrosion by separating materials with a different pH.

XIX Dzielnica
Warszawa

ISOLATOR LARGE - PVC L

THERMOSTOPS

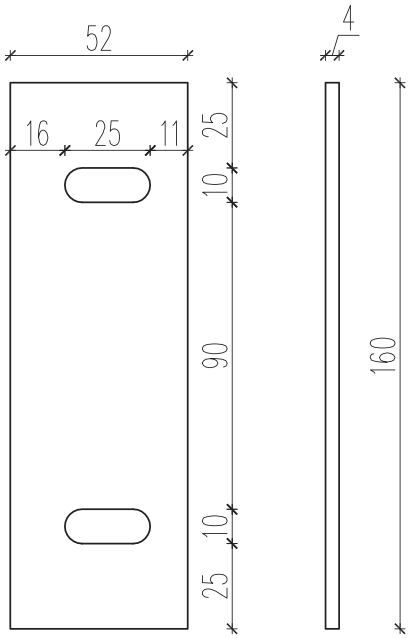

Material:

FREE FOAMED PVC SHEET

ISOLATOR MEDIUM - PVC M

THERMOSTOPS

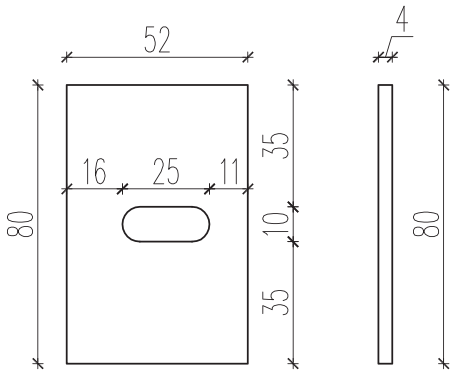

Material:

FREE FOAMED PVC SHEET

STANDARD ALUMINIUM PROFILE

FASTENING SYSTEMS FOR VENTILATED FACADES

STANDARD ALUMINIUM PROFILES are used to fix and support the panels. Depending on the fixing method and panel layout different types of profiles are used.

Lazurowe Ogrody
Warszawa

ARTRYS T PROFILE - ATP A/B/2

ALUMINIUM PROFILE

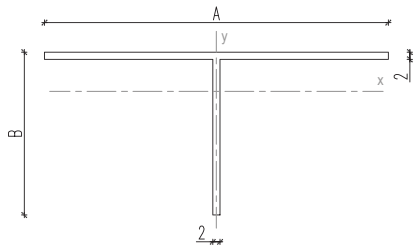

PROFILE TYPE	A [mm]	B [mm]
ARTRYS T PROFILE - ATP 135/55/2	135	55
ARTRYS T PROFILE - ATP 105/55/2	105	55
ARTRYS T PROFILE - ATP 95/55/2	95	55
ARTRYS T PROFILE - ATP 75/55/2	75	55
ARTRYS T PROFILE - ATP 95/45/2	95	45
ARTRYS T PROFILE - ATP 95/35/2	95	35

Profile ATP 135/55/2 specification	
Jx = 41,01 cm^4	Jy = 8,25 cm^4
Wx = 1,78 cm^3	Wy = 6,08 cm^3
A = 3,76 cm^2	Weight = 1,02 kg/m

Profile ATP 95/55/2 specification	
Jx = 14,29 cm^4	Jy = 7,63 cm^4
Wx = 1,73 cm^3	Wy = 3,01 cm^3
A = 2,96 cm^2	MWeight = 0,80 kg/m

Profile ATP 105/55/2 specification	
Jx = 19,30 cm^4	Jy = 7,82 cm^4
Wx = 1,75 cm^3	Wy = 3,68 cm^3
A = 3,16 cm^2	Weight = 0,86 kg/m

Profile ATP 75/55/2 specification	
Jx = 7,18 cm^4	Jy = 7,03 cm^4
Wx = 1,69 cm^3	Wy = 1,88 cm^3
A = 2,56 cm^2	Weight = 0,70 kg/m

Profile ATP 95/45/2 specification	
Jx = 14,29 cm^4	Jy = 4,33 cm^4
Wx = 1,17 cm^3	Wy = 3,01 cm^3
A = 2,76 cm^2	Weight = 0,75 kg/m

Profile ATP 95/35/2 specification	
Jx = 14,29 cm^4	Jy = 2,11 cm^4
Wx = 0,71 cm^3	Wy = 3,01 cm^3
A = 2,56 cm^2	Weight = 0,70 kg/m

ARTRYS L PROFILE - ALP A/B/2

ALUMINIUM PROFILE

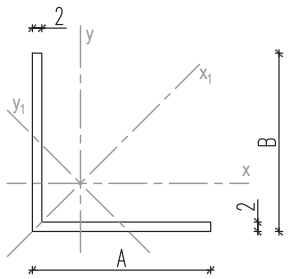

PROFILE TYPE	A [mm]	B [mm]
ARTRYS L PROFILE - ALP 45/55/2	45	55
ARTRYS L PROFILE - ALP 45/45/2	45	45
ARTRYS L PROFILE - ALP 45/35/2	45	35
ARTRYS L PROFILE - ALP 45/20/2	45	20

Profile ALP 45/55/2 specification	
Jx = 6,17 cm^4	Jy = 3,77 cm^4
Jx_1 = 8,09 cm^4	Jy_1 = 1,85 cm^4
Wx = 1,58 cm^3	Wy= 1,10 cm^3
Wx_1= 2,10 cm^3	Wy_1 = 1,04 cm^3
A = 1,96 cm^2	Weight = 0,53 kg/m

Profile ALP 45/45/2 specification	
Jx = 3,55 cm^4	Jy = 3,55 cm^4
Jx_1 = 5,68 cm^4	Jy_1 = 1,43 cm^4
Wx = 1,08 cm^3	Wy= 1,08 cm^3
Wx_1= 1,79 cm^3	Wy_1 = 0,89 cm^3
A = 1,76 cm^2	Weight= 0,48 kg/m

Profile ALP 45/35/2 specification	
Jx = 1,77 cm^4	Jy =3,28 cm^4
Jx_1 = 4,14 cm^4	Jy_1 =0,90 cm^4
Wx = 0,67 cm^3	Wy=1,04 cm^3
Wx_1= 1,64 cm^3	Wy_1= 0,54 cm^3
A = 1,56 cm^2	Weight = 0,42 kg/m

Profile ALP 45/20/2 specification	
Jx = 0,36 cm^4	Jy = 2,71 cm^4
Jx_1 = 2,83 cm^4	Jy_1 = 0,23 cm^4
Wx = 0,22 cm^3	Wy= 0,95 cm^3
Wx_1= 0,98 cm^3	Wy_1= 0,19 cm^3
A = 1,26 cm^2	Weight = 0,34 kg/m

SHORT OUTREACH SYSTEM

FASTENING SYSTEMS FOR VENTILATED FACADES

The short outreach system consists of two brackets 45 mm and 35 mm – the smallest available on the market. Together with specially DESIGNED L and T profiles the system allows for outreach adjustment in 39 mm to 80 mm range. It can be used when insulation is not required on the interior walls and steel structures, for example.

Budynek ZUS
Wrocław

ARTRYS BRACKET LARGE NEW - BLN 35

SHORT OUTREACH SYSTEM

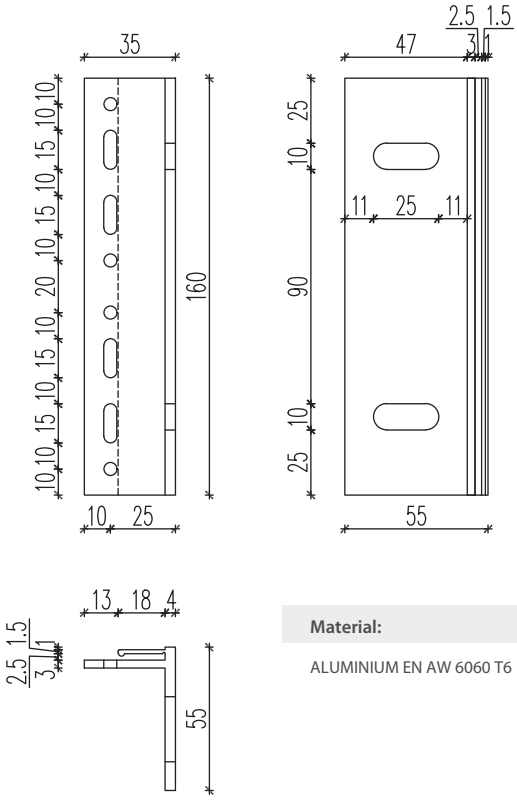

Material:

ALUMINIUM EN AW 6060 T6

ARTRYS BRACKET LARGE NEW - BLN 45

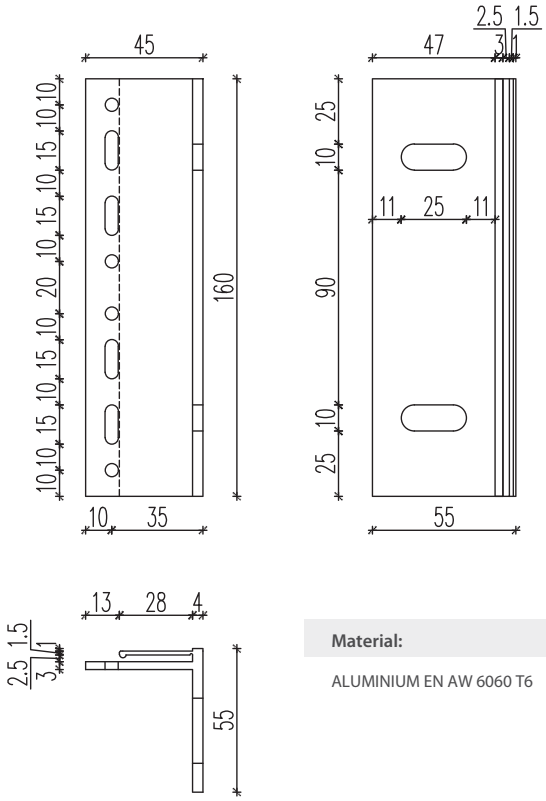

Material:

ALUMINIUM EN AW 6060 T6

ARTRYS BRACKET MEDIUM NEW - BMN 35

SHORT OUTREACH SYSTEM

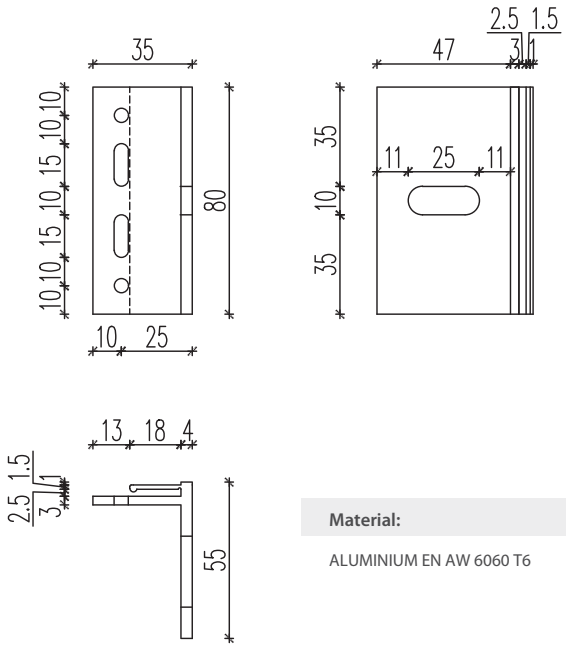

Material:

ALUMINIUM EN AW 6060 T6

ARTRYS BRACKET MEDIUM NEW - BMN 45

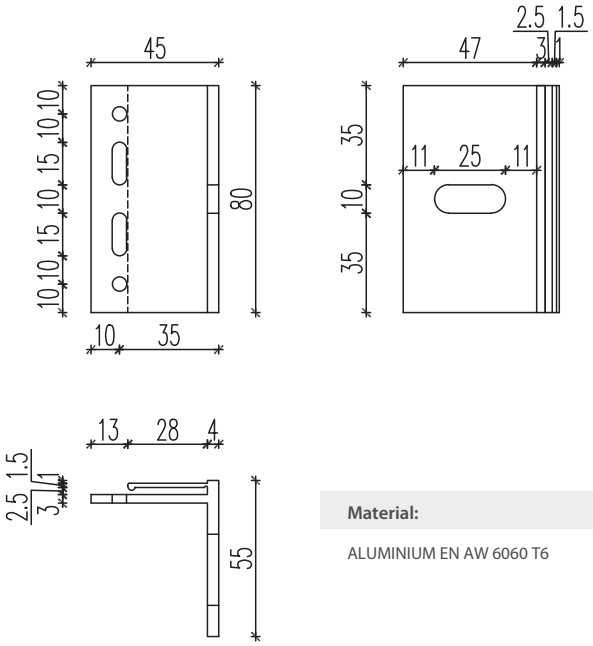

Material:

ALUMINIUM EN AW 6060 T6

STANDARD DETAILS - ADHESIVE

FASTENING SYSTEMS FOR VENTILATED FACADES

(VERTICAL PROFILES LAYOUT)

Rezydencja Naruszewicza
Warszawa

ATTIC JUNCTION AND PANEL BASE

ADHESIVE SYSTEM

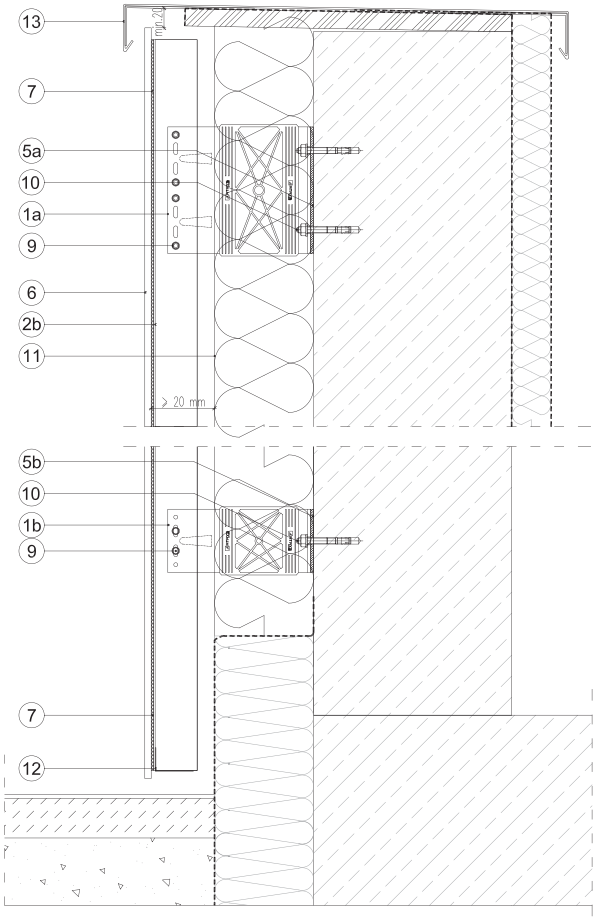

1a.	ARTRYS BRACKET LARGE PASSIVE - BLP X
1b.	ARTRYS BRACKET MEDIUM PASSIVE - BMP X
2b.	ARTRYS L PROFILE - ALP 45/55/2
5a.	LARGE WASHER - PVC L
5b.	MEDIUM WASHER - PVC M
6.	CLADDING PANEL
7.	ADHESIVE SYSTEM
9.	SELF-DRILLING SCREW
10.	ANCHOR
11.	MINERAL WOOL WITH TISSUE
12.	PERFORATED PROFILE
13.	FLASHING

PLAN CORNER DETAIL

ADHESIVE SYSTEM

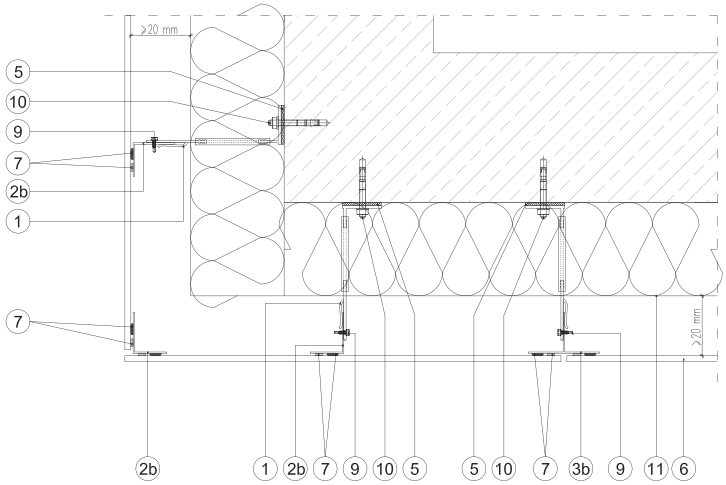

1.	ARTRYS BRACKET PASSIVE - BLP X/BMP X
2b.	ARTRYS L PROFILE - ALP 45/55/2
3b.	ARTRYS T PROFILE - ATP 95/55/2
5.	WASHER - PVC L/PVC M
6.	CLADDING PANEL
7.	ADHESIVE SYSTEM
9.	SELF-DRILLING SCREW
10.	ANCHOR
11.	MINERAL WOOL WITH TISSUE

SECTION WINDOW HEAD AND SILL

ADHESIVE SYSTEM

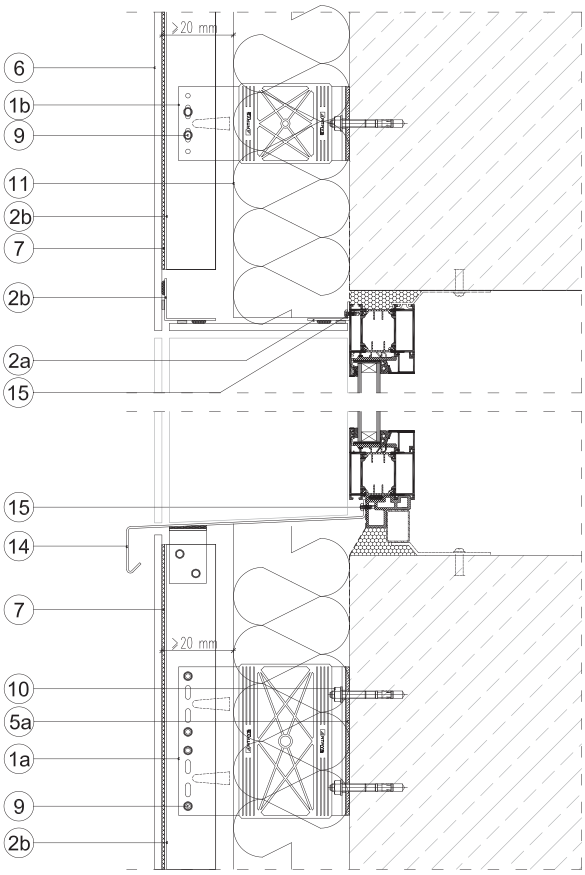

1a.	ARTRYS BRACKET LARGE PASSIVE - BLP X
1b.	ARTRYS BRACKET MEDIUM PASSIVE - BMP X
2a.	ARTRYS L PROFILE - ALP 45/20/2
2b.	ARTRYS L PROFILE - ALP 45/55/2
5a.	LARGE WASHER - PVC L
6.	CLADDING PANEL
7.	ADHESIVE SYSTEM
9.	SELF-DRILLING SCREW
10.	ANCHOR
11.	MINERAL WOOL WITH TISSUE
14.	WINDOW SILL
15.	SELF-DRILLING SCREW

PLAN WINDOW JAMB

ADHESIVE SYSTEM

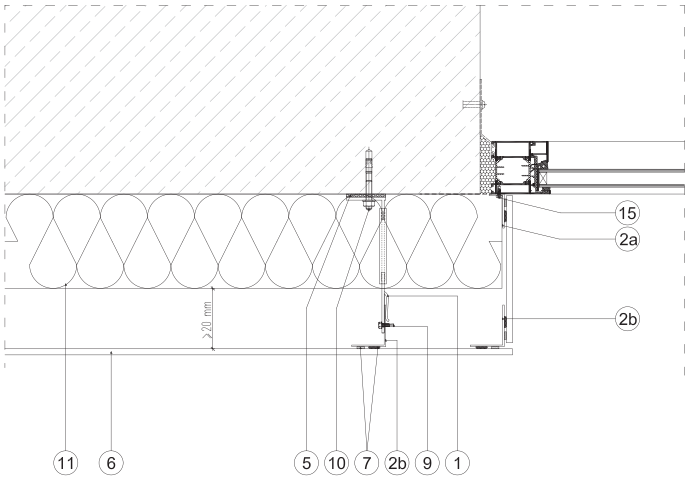

1.	ARTRYS BRACKET PASSIVE - BLP X/BMP X
2a.	ARTRYS L PROFILE - ALP 45/20/2
2b.	ARTRYS L PROFILE - ALP 45/55/2
5.	WASHER - PVC L/PVC M
6.	CLADDING PANEL
7.	ADHESIVE SYSTEM
9.	SELF-DRILLING SCREW
10.	ANCHOR
11.	MINERAL WOOL WITH TISSUE
15.	SELF-DRILLING SCREW

Standard fastening
ADHESIVE SYSTEM

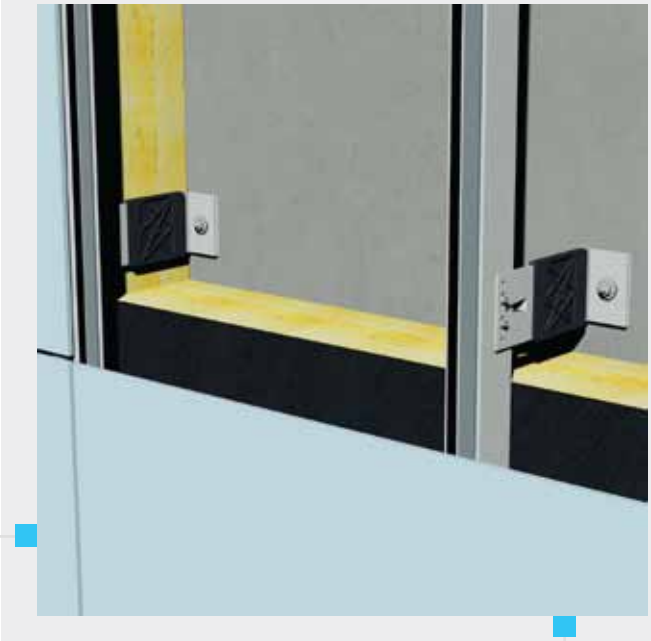

STANDARD DETAIL - FACE FIXING

FASTENING SYSTEMS FOR VENTILATED FACADES

(VERTICAL PROFILES LAYOUT)

Przychodania SPZZLO
Warszawa

ATTIC JUNCTION AND PANEL BASE

RIVETED SYSTEM

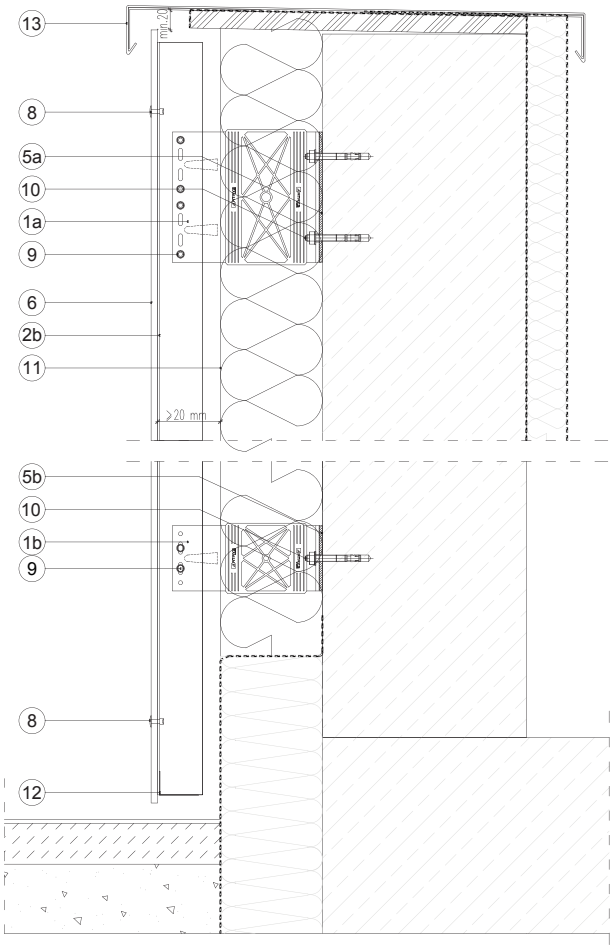

1a.	ARTRYS BRACKET LARGE PASSIVE - BLP X
1b.	ARTRYS BRACKET MEDIUM PASSIVE - BMP X
2b.	ARTRYS L PROFILE - ALP 45/55/2
5a.	LARGE WASHER - PVC L
5b.	MEDIUM WASHER - PVC M
6.	CLADDING PANEL
8.	RIVET
9.	SELF-DRILLING SCREW
10.	ANCHOR
11.	MINERAL WOOL WITH TISSUE
12.	PERFORATED PROFILE
13.	FLASHING

PLAN CORNER DETAIL

RIVETED SYSTEM

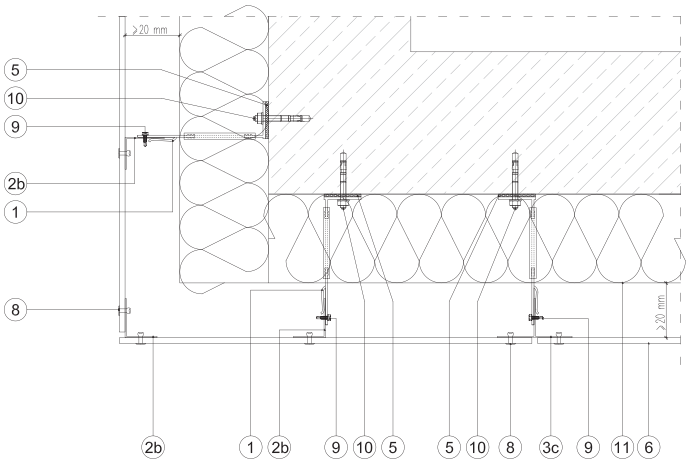

1.	ARTRYS BRACKET PASSIVE - BLP X/BMP X
2b.	ARTRYS L PROFILE - ALP 45/55/2
3c.	ARTRYS T PROFILE - ATP 105/55/2
5.	WASHER - PVC L/PVC M
6.	CLADDING PANEL
8.	RIVET
9.	SELF-DRILLING SCREW
10.	ANCHOR
11.	MINERAL WOOL WITH TISSUE

SECTION WINDOW HEAD AND SILL

RIVETED SYSTEM

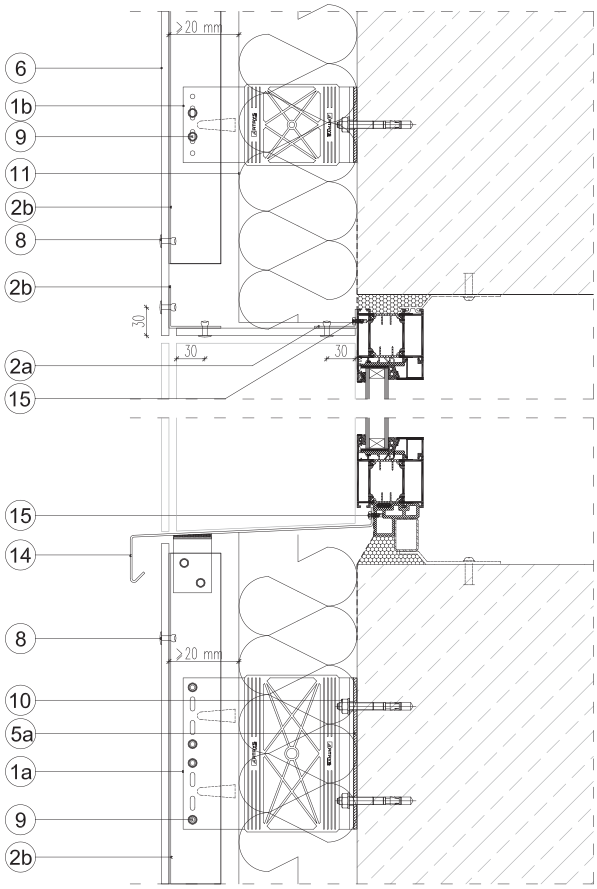

1a.	ARTRYS BRACKET LARGE PASSIVE - BLP X
1b.	ARTRYS BRACKET MEDIUM PASSIVE - BMP X
2a.	ARTRYS L PROFILE - ALP 45/20/2
2b.	ARTRYS L PROFILE - ALP 45/55/2
5a.	LARGE WASHER - PVC L
6.	CLADDING PANEL
8.	RIVET
9.	SELF-DRILLING SCREW
10.	ANCHOR
11.	MINERAL WOOL WITH TISSUE
14.	WINDOW SILL
15.	SELF-DRILLING SCREW

WINDOW JAMB PLAN

RIVETED SYSTEM

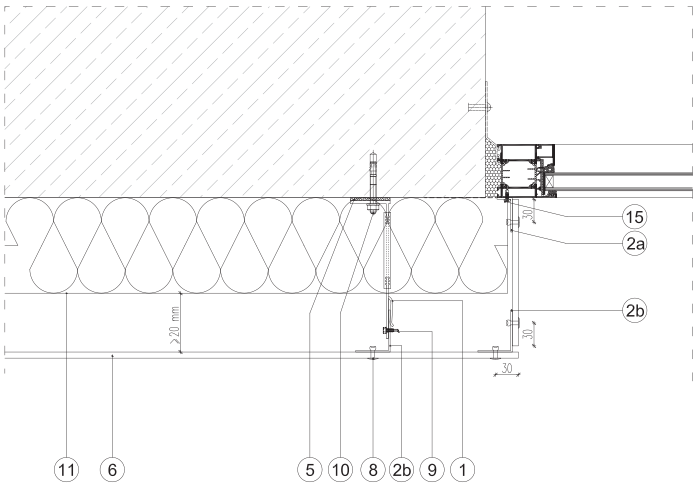

1.	ARTRYS BRACKET PASSIVE - BLP X/BMP X
2a.	ARTRYS L PROFILE - ALP 45/20/2
2b.	ARTRYS L PROFILE - ALP 45/55/2
5.	WASHER - PVC L/PVC M
6.	CLADDING PANEL
8.	RIVET
9.	SELF-DRILLING SCREW
10.	ANCHOR
11.	MINERAL WOOL WITH TISSUE
15.	SELF-DRILLING SCREW

Standard fixing/rivets
RIVETED SYSTEM

HORIZONTAL PROFILE LAYOUT

The horizontal profile layout is the most cost effective layout when high, narrow cladding panels are to be installed. The Artrys solution stands out from other available solutions available as our brackets are fixed in the same vertical direction. This allows all the forces to be transferred parallel to the strongest points of the assembly.

Horizontal profiles are fixed to AD adapters which can be easily adjusted. The benefits of this solution are easy installation (without significant interference in the insulation) and low material consumption.

Centrum Żeglarstwa Wodnego i Lodowego, Olsztyn

ARTRYS ADAPTER - AD

HORIZONTAL PROFILE LAYOUT

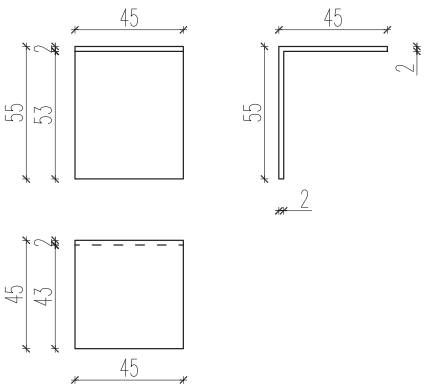

Material:

ALUMINIUM EN AW 6060 T6/T66

ATTIC JUNCTION AND PANEL BASE

HORIZONTAL PROFILE LAYOUT

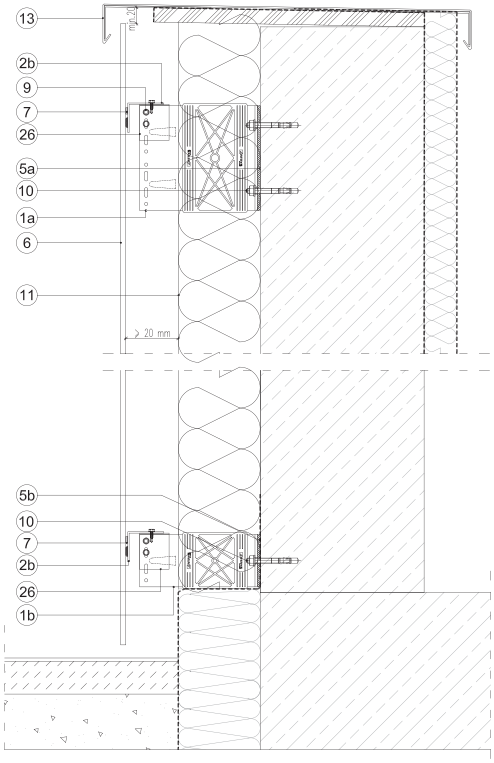

1a.	ARTRYS BRACKET LARGE PASSIVE - BLP X
1b.	ARTRYS BRACKET MEDIUM PASSIVE - BMP X
2b.	ARTRYS L PROFILE - ALP 45/55/2
5a.	LARGE WASHER - PVC L
5b.	MEDIUM WASHER - PVC M
6.	CLADDING PANEL
7.	ADHESIVE SYSTEM
9.	SELF-DRILLING SCREW
10.	ANCHOR
11.	MINERAL WOOL WITH TISSUE
13.	FLASHING
26.	ARTRYS ADPATER - AD

PLAN DETAIL OF CORNER

HORIZONTAL PROFILE LAYOUT

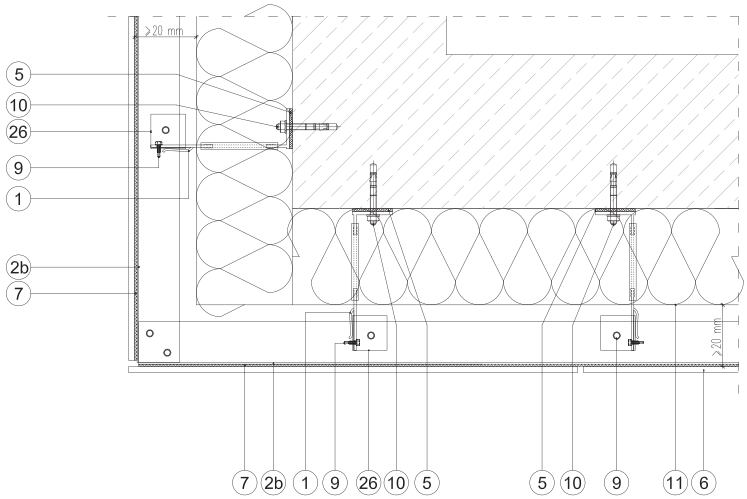

1.	ARTRYS BRACKET PASSIVE - BLP X/BMP X
2b.	ARTRYS L PROFILE - ALP 45/55/2
5.	WASHER - PVC L/PVC M
6.	CLADDING PANEL
7.	ADHESIVE SYSTEM
9.	SELF-DRILLING SCREW
10.	ANCHOR
11.	MINERAL WOOL WITH TISSUE
15.	SELF-DRILLING SCREW
26.	ARTRYS ADAPTER - AD

WINDOW HEAD AND SILL SECTION

HORIZONTAL PROFILE LAYOUT

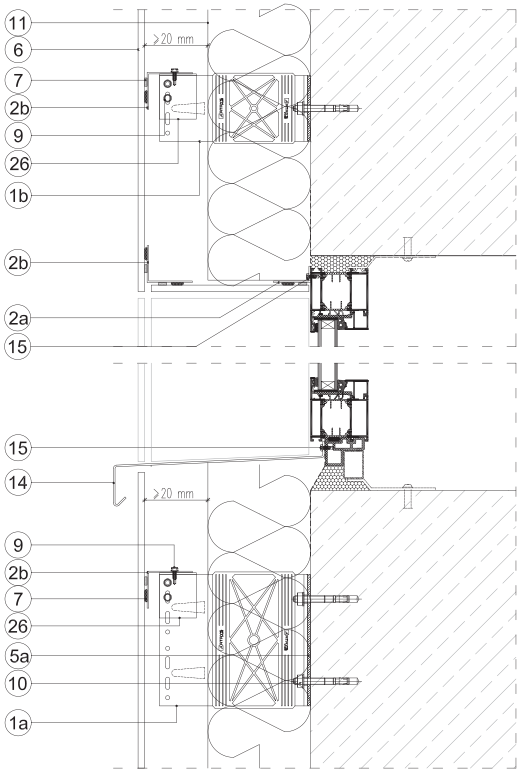

1a.	ARTRYS BRACKET LARGE PASSIVE - BLP X
1b.	ARTRYS BRACKET MEDIUM PASSIVE - BMP X
2a.	ARTRYS L PROFILE - ALP 45/20/2
2b.	ARTRYS L PROFILE - ALP 45/55/2
5a.	LARGE WASHER - PVC L
6.	CLADDING PANEL
7.	ADHESIVE SYSTEM
9.	SELF-DRILLING SCREW
10.	ANCHOR
11.	MINERAL WOOL WITH TISSUE
14.	WINDOW SILL
15.	SELF-DRILLING SCREW
26.	ARTRYS ADPATER - AD

WINDOW JAMB PLAN

HORIZONTAL PROFILE LAYOUT

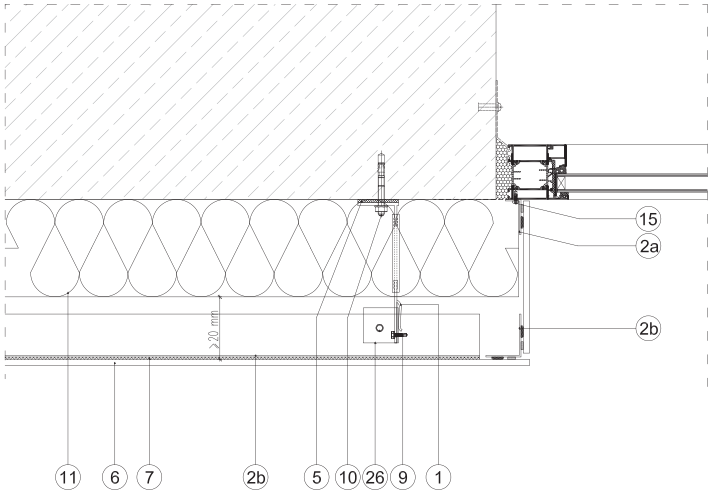

1.	ARTRYS BRACKET PASSIVE - BLP X/BMP X
2a.	ARTRYS L PROFILE - ALP 45/20/2
2b.	ARTRYS L PROFILE - ALP 45/55/2
5.	WASHER - PVC L/PVC M
6.	CLADDING PANEL
7.	ADHESIVE SYSTEM
9.	SELF-DRILLING SCREW
10.	ANCHOR
11.	MINERAL WOOL WITH TISSUE
15.	SELF-DRILLING SCREW
26.	ARTRYS ADPATER - AD

HORIZONTAL PROFILES LAYOUT

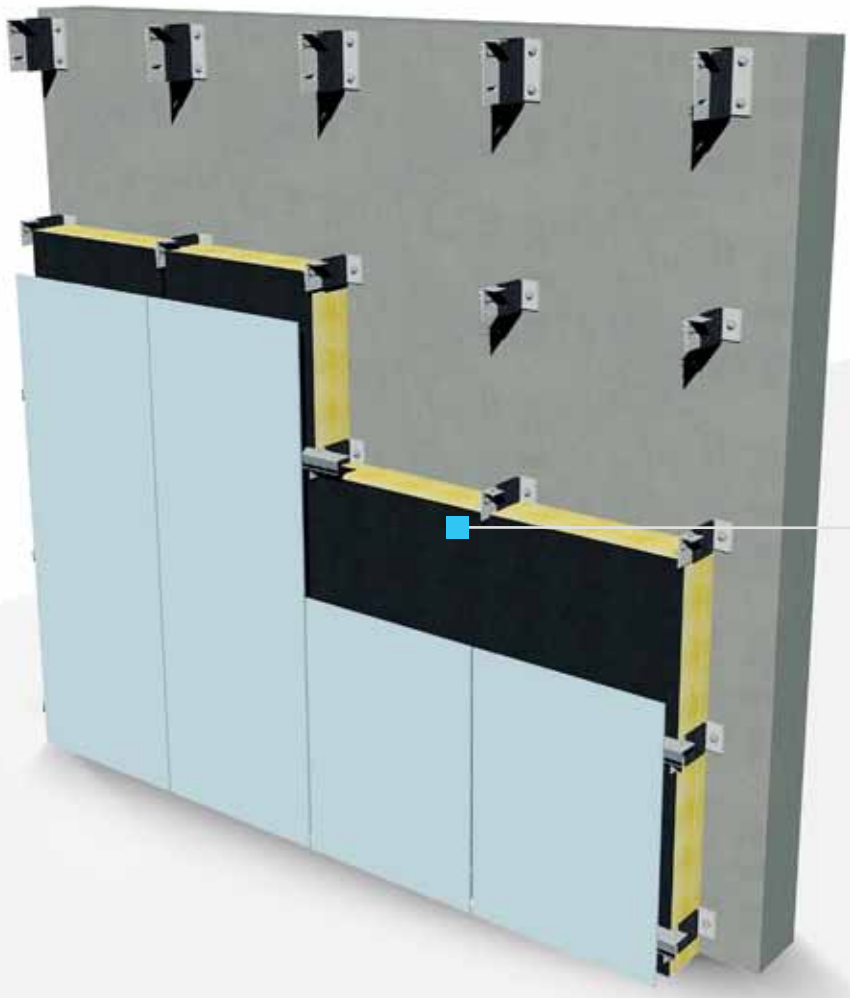

S-Z SYSTEM

FASTENING SYSTEM FOR COMPOSITE PANELS

SZ SYSTEM is designed for horizontal panel layout. The ASP (S shaped) profile is attached to the bottom of the cassette while The AZP (Z shaped) profile is attached to its top part. When the cassettes are installed the profiles interlock. Each AZP profile is additionally attached to vertical profiles with screws. The ASTP profile is used at the bottom of the facade to install the first row of ACP cassettes. Stainless steel AC clips secure the connection between the SZ (ASP-AZP) profiles.

Nordic Haven, Bydgoszcz

ARTRYS SZ-SYSTEM PROFILE - ASP

S-Z SYSTEM

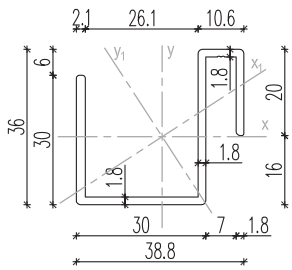

Profile ASP specification	
Jx = 3,18 cm^4	Jy = 4,53 cm^4
Jx_1 = 2,17 cm^4	Jy_1 = 5,53 cm^4
Wx = 1,57 cm^3	Wy = 2,23 cm^3
Wx_1 = 0,97cm^3	Wy_1 = 2,09 cm^3
A = 2,22 cm^2	Weight = 0,60 kg/m

Material

ALUMINIUM EN AW 6060 T6/T66

ARTRYS SZ-SYSTEM PROFILE - AZP

S-Z SYSTEM

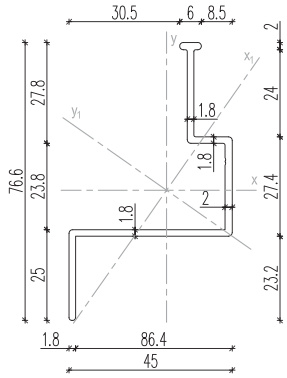

Profile AZP specification	
Jx = 9,45 cm^4	Jy = 6,28 cm^4
Jx_1 = 3,06 cm^4	Jy_1 = 12,67 cm^4
Wx = 2,32 cm^3	Wy = 2,34 cm^3
Wx_1 = 1,41cm^3	Wy_1 = 2,85 cm^3
A = 2,46 cm^2	Weight = 0,67 kg/m

Material

ALUMINIUM EN AW 6060 T6/T66

ARTRYS SZ-SYSTEM PROFILE - ASTP

S-Z SYSTEM

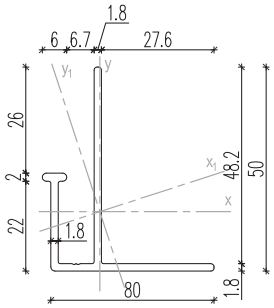

Profile ASTP specification	
Jx = 4,33 cm^4	Jy = 1,99 cm^4
Jx_1 = 4,59 cm^4	Jy_1 = 1,73 cm^4
Wx = 1,22 cm^3	Wy = 0,71 cm^3
Wx_1 = 1,35cm^3	Wy_1 = 0,77 cm^3
A = 2,06 cm^2	Weight = 0,56 kg/m

Material

ALUMINIUM EN AW 6060 T6/T66

ARTRYS CLIP - AC

S-Z SYSTEM

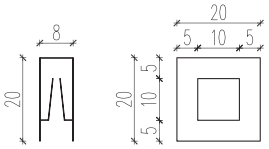

Material

STAL NIERDZEWNA 1.4301/2B (304)

ATTIC JUNCTION AND PANEL BASE

S-Z SYSTEM

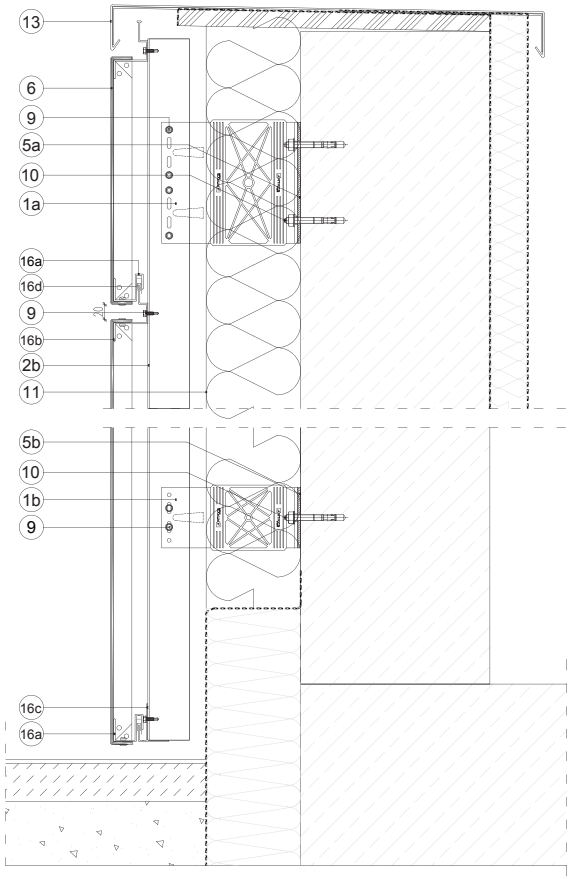

1a.	ARTRYS BRACKET LARGE PASSIVE - BLP X
1b.	ARTRYS BRACKET MEDIUM PASSIVE - BMP X
2b.	ARTRYS L PROFILE - ALP 45/55/2
5a.	LARGE WASHER - PVC L
5b.	MEDIUM WASHER - PVC M
6.	CLADDING PANEL
9.	SELF-DRILLING SCREW
10.	ANCHOR
11.	MINERAL WOOL WITH TISSUE
13.	FLASHING
16a.	ARTRYS SZ-SYSTEM PROFILE - ASP
16b.	ARTRYS SZ-SYSTEM PROFILE - AZP
16c.	ARTRYS SZ-SYSTEM PROFILE - ASTP
16d.	ARTRYS CLIP - AC

PLAN CORNER DETAIL

S-Z SYSTEM

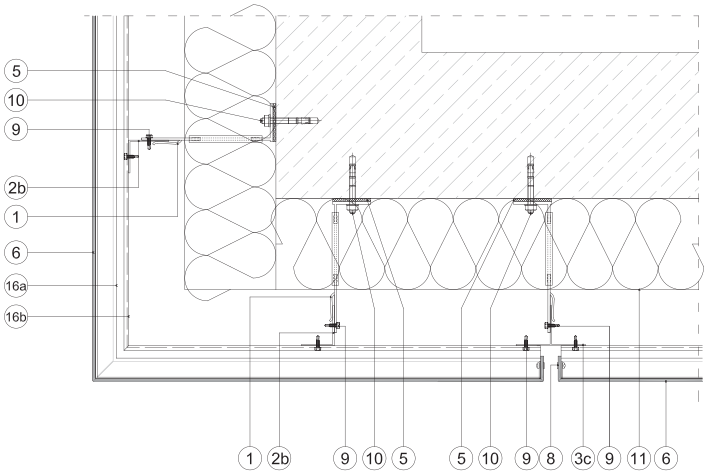

1.	ARTRYS BRACKET PASSIVE - BLP X/BMP X
2b.	ARTRYS L PROFILE - ALP 45/55/2
3c.	ARTRYS T PROFILE - ATP 105/55/2
5.	WASHER - PVC L / PVC M
6.	CLADDING PANEL
8.	RIVET
9.	SELF-DRILLING SCREW
10.	ANCHOR
11.	MINERAL WOOL WITH TISSUE
15.	SELF-DRILLING SCREW
16a.	ARTRYS SZ-SYSTEM PROFILE - ASP
16b.	ARTRYS SZ-SYSTEM PROFILE - AZP

WINDOW HEAD AND SILL SECTION

S-Z SYSTEM

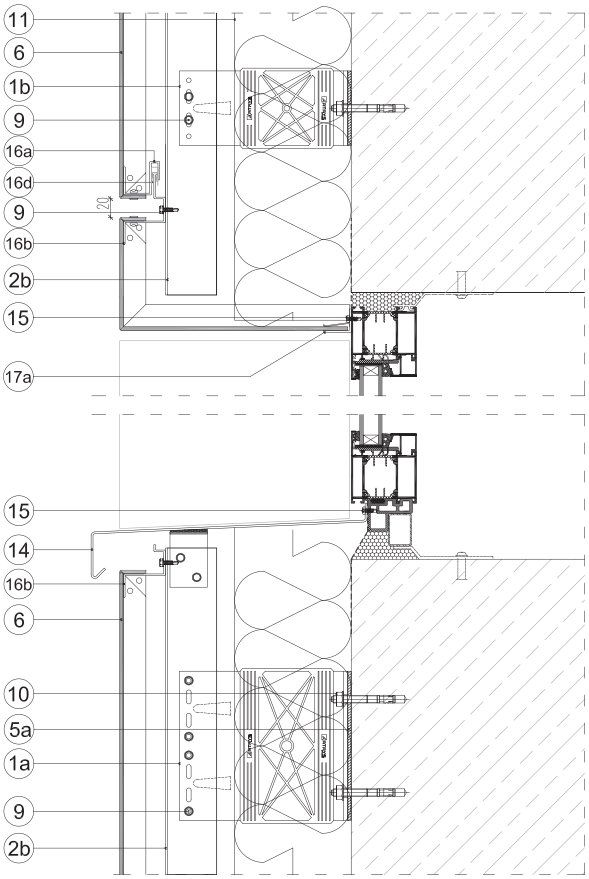

1a.	ARTRYS BRACKET LARGE PASSIVE - BLP X
1b.	ARTRYS BRACKET MEDIUM PASSIVE - BMP X
2b.	ARTRYS L PROFILE - ALP 45/55/2
5a.	LARGE WASHER - PVC L
6.	CLADDING PANEL
9.	SELF-DRILLING SCREW
10.	ANCHOR
11.	MINERAL WOOL WITH TISSUE
14.	WINDOW SILL
15.	SELF-DRILLING SCREW
16a.	ARTRYS SZ-SYSTEM PROFILE - ASP
16b.	ARTRYS SZ-SYSTEM PROFILE - AZP
16d.	ARTRYS CLIP - AC
17a.	ARTRYS WINDOW PROFILE - AWP1

Fastening system
for composite panels

S-Z SYSTEM

Y HANGING SYSTEM

FASTENING SYSTEM FOR COMPOSITE PANELS

ARTRYS Y HANGING SYSTEMS can be used for both vertical and horizontal panel layouts. The AY hanger is attached to the AYP profile. The AY is used to hang the ACP cassettes and fits neatly in the cut-outs on their sides.

In order to stiffen the connection and absorb any shocks a rubber gasket is inserted at the AY hangers - the gaskets are available in three colours.

Lipowa Ostoja, Pruszków

ARTRYS Y PROFILE - AYP

Y HANGING SYSTEM

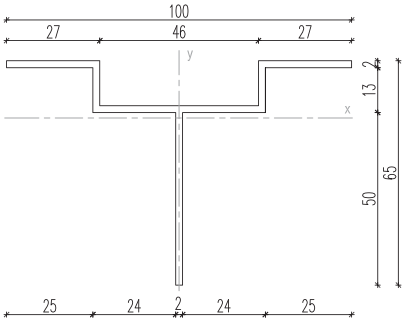

Profile AYP specification	
Jx = 10,67 cm^4	Jy = 19,67 cm^4
Wx = 2,20 cm^3	Wy = 3,93 cm^3
A = 3,52 cm^2	Weight = 0,96 kg/m

Material

ALUMINIUM EN AW 6060 T6/T66

ARTRYS HOLDER - AY

Y HANGING SYSTEM

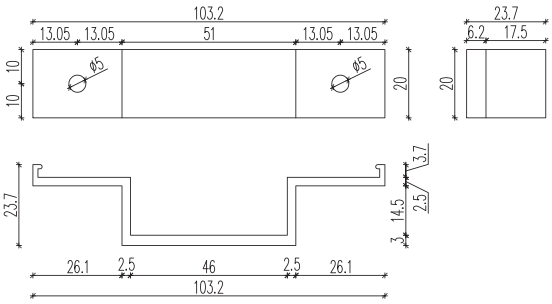

Material

ALUMINIUM EN AW 6060 T6/T66

ATTIC JUNCTION AND PANEL BASE

Y HANGING SYSTEM

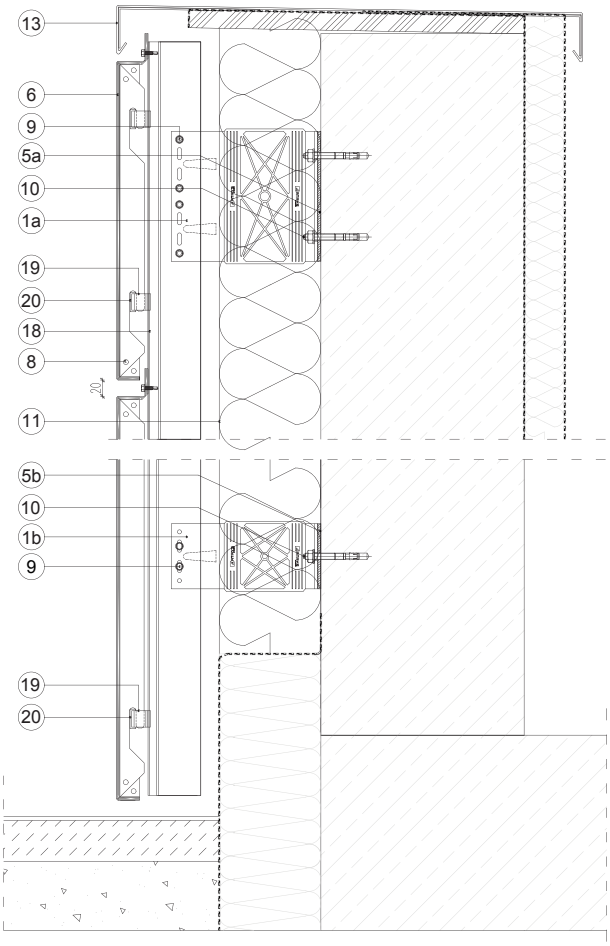

1a.	ARTRYS BRACKET LARGE PASSIVE - BLP X
1b.	ARTRYS BRACKET MEDIUM PASSIVE - BMP X
5a.	LARGE WASHER - PVC L
6.	CLADDING PANEL
8.	RIVET
9.	SELF-DRILLING SCREW
10.	ANCHOR
11.	MINERAL WOOL WITH TISSUE
13.	FLASHING
18.	ARTRYS Y PROFILE - AYP
19.	ARTRYS HOLDER - AY
20.	ARTRYS GASKET

PLAN DETAIL OF CORNER

Y HANGING SYSTEM

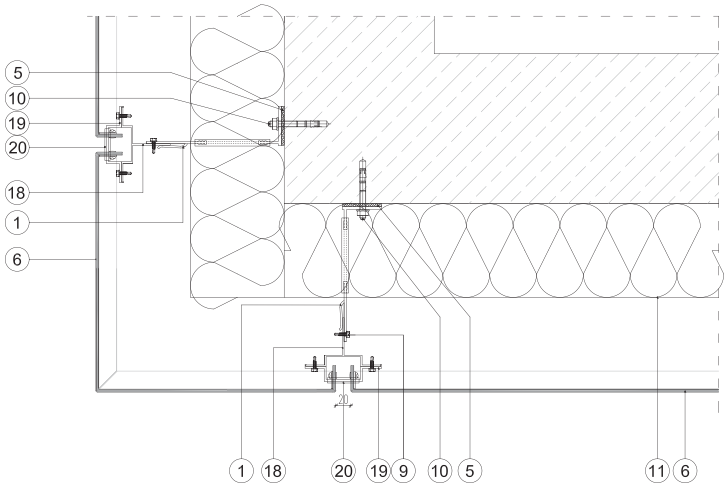

1.	ARTRYS BRACKET PASSIVE - BLP X/BMP X
5.	WASHER - PVC L / PVC M
6.	CLADDING PANEL
9.	SELF-DRILLING SCREW
10.	ANCHOR
11.	MINERAL WOOL WITH TISSUE
18.	ARTRYS Y PROFILE - AYP
19.	ARTRYS HOLDER - AY
20.	ARTRYS GASKET

SECTION WINDOW HEAD AND SILL

Y HANGING SYSTEM

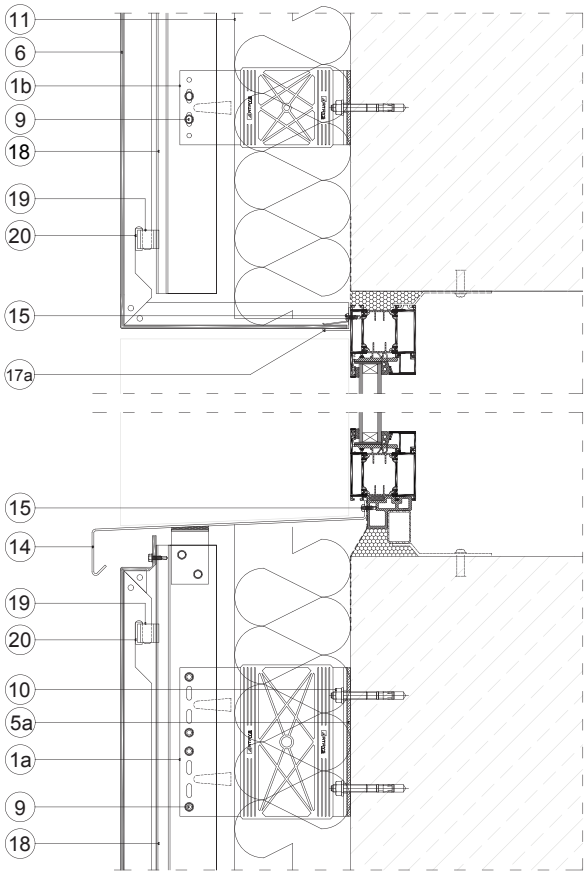

1a.	ARTRYS BRACKET LARGE PASSIVE - BLP X
1b.	ARTRYS BRACKET MEDIUM PASSIVE - BMP X
5a.	LARGE WASHE R - PVC L
5b.	MEDIUM WASHER - PVC M
6.	CLADDING PANEL
9.	SELF-DRILLING SCREW
10.	ANCHOR
11.	MINERAL WOOL WITH TISSUE
14.	WINDOW SILL
15.	SELF-DRILLING SCREW
17a.	ARTRYS WINDOW PROFILE - AWP1
18.	ARTRYS Y PROFILE - AYP
19.	ARTRYS HOLDER - AY
20.	ARTRYS GASKET

PLAN WINDOW JAMB

Y HANGING SYSTEM

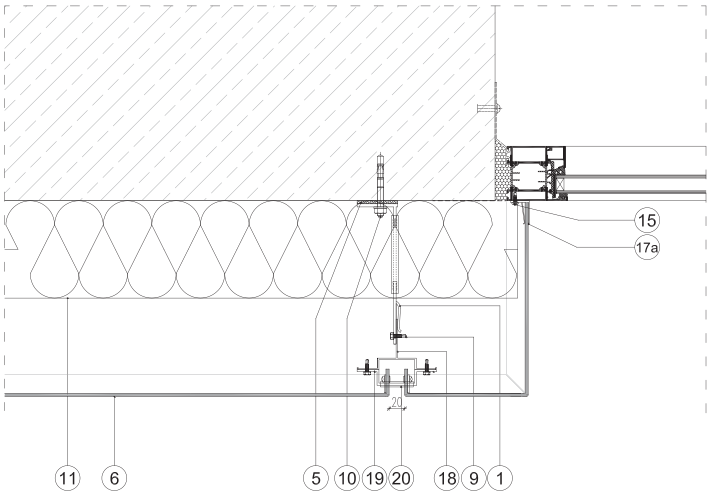

1.	ARTRYS BRACKET PASSIVE - BLP X/BMP X
5.	WASHER - PVC L / PVC M
6.	CLADDING PANEL
9.	SELF-DRILLING SCREW
10.	ANCHOR
11.	MINERAL WOOL WITH TISSUE
15.	SELF-DRILLING SCREW
17a.	ARTRYS WINDOW PROFILE - AWP1
18.	ARTRYS Y PROFILE - AYP
19.	ARTRYS HOLDER - AY
20.	ARTRYS GASKET

Fastening system for composite panels

Y HANGING SYSTEM

V CLAMPING SYSTEM

FASTENING SYSTEM FOR COMPOSITE PANELS

The V CLAMPING SYSTEM is one of the fastest and easiest ways to mountACP cassettes. The AV clamp is fixed to the bottom part of the cassette and slides onto the bend side (which is fixed to the main structure) of the cassette installed under it.

Atelier Żoliborz, Warszawa

ARTRYS HOLDER - AV

V CLAMPING SYSTEM

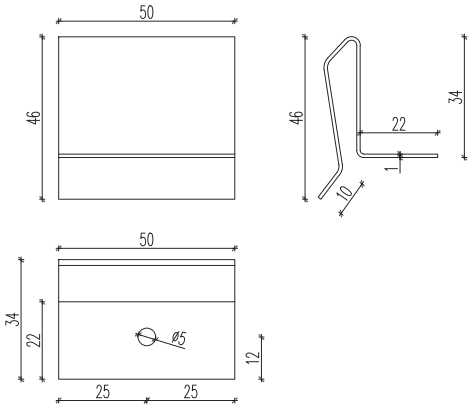

Material
STAL NIERDZEWNA 1.4301/2B (304)

ATTIC JUNCTION AND PANEL BASE

V CLAMPING SYSTEM

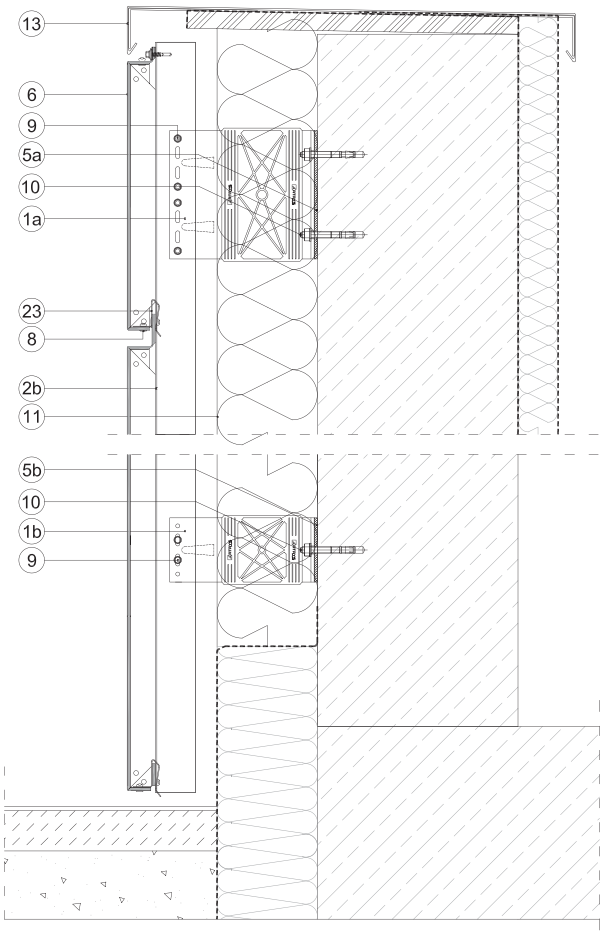

1a.	ARTRYS BRACKET LARGE PASSIVE - BLP X
1b.	ARTRYS BRACKET MEDIUM PASSIVE - BMP X
2b.	ARTRYS L PROFILE - ALP 45/55/2
5a.	LARGE WASHER - PVC L
5b.	MEDIUM WASHER - PVC M
6.	CLADDING PANEL
8.	RIVET
9.	SELF-DRILLING SCREW
10.	ANCHOR
11.	MINERAL WOOL WITH TISSUE
13.	FLASHING
23.	ARTRYS HOLDER - AV

PLAN CORNER DETAIL

V CLAMPING SYSTEM

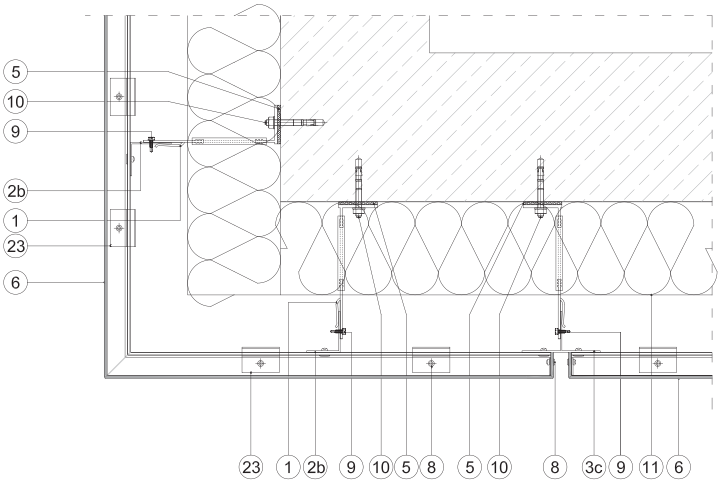

1.	ARTRYS BRACKET PASSIVE - BLP X/BMP X
2b.	ARTRYS L PROFILE - ALP 45/55/2
3c.	ARTRYS T PROFILE - ATP 105/55/2
5.	WASHER - PVC L / PVC M
6.	CLADDING PANEL
8.	RIVET
9.	SELF-DRILLING SCREW
10.	ANCHOR
11.	MINERAL WOOL WITH TISSUE
23.	ARTRYS HOLDER - AV

SECTION WINDOW HEAD AND SILL

V CLAMPING SYSTEM

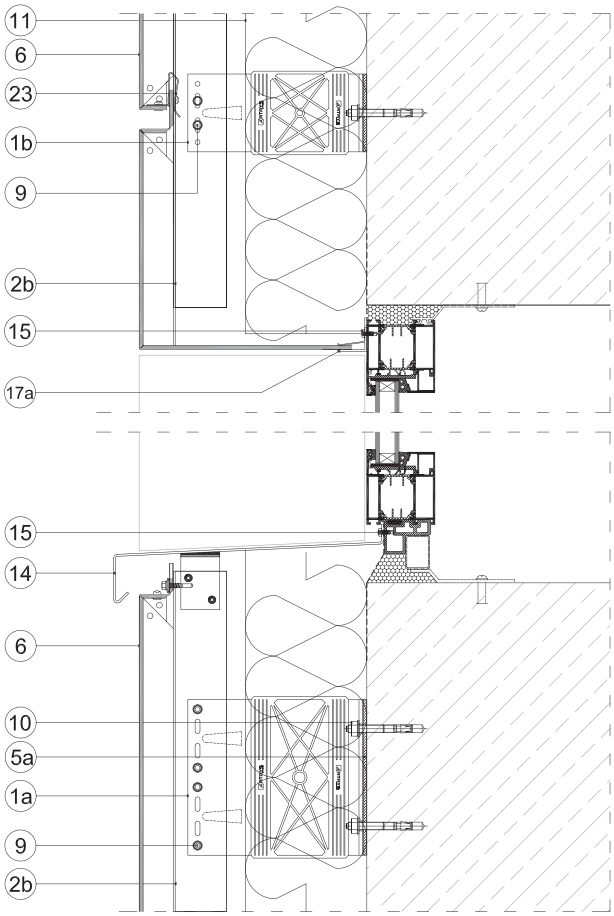

1a.	ARTRYS BRACKET LARGE PASSIVE - BLP X
1b.	ARTRYS BRACKET MEDIUM PASSIVE - BMP X
2b.	ARTRYS L PROFILE - ALP 45/55/2
5a.	LARGE WASHER - PVC L
6.	CLADDING PANEL
8.	RIVET
9.	SELF-DRILLING SCREW
10.	ANCHOR
11.	MINERAL WOOL WITH TISSUE
14.	WINDOW SILL
15.	SELF-DRILLING SCREW
17a.	ARTRYS WINDOW PROFILE - AWP1
23.	ARTRYS HOLDER – AV

PLAN WINDOW JAMB

V CLAMPING SYSTEM

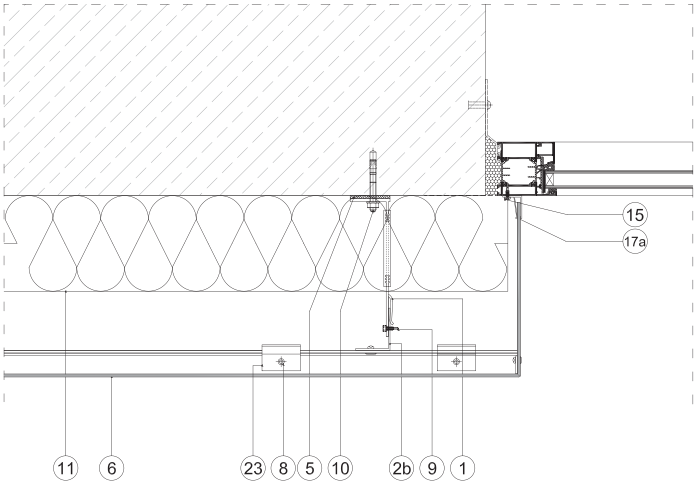

1.	ARTRYS BRACKET PASSIVE - BLP X/BMP X
2b.	ARTRYS L PROFILE - ALP 45/55/2
5.	WASHER - PVC L / PVC M
6.	CLADDING PANEL
8.	RIVET
9.	SELF-DRILLING SCREW
10.	ANCHOR
11.	MINERAL WOOL WITH TISSUE
15.	SELF-DRILLING SCREW
17a.	ARTRYS WINDOW PROFILE - AWP1
23.	ARTRYS HOLDER - AV

Fastening system for
composite panels
V CLAMPING SYSTEM

AOP TOP HAT PROFILES

NON-STANDARD PROFILES:

AOP TOP-HAT PROFILES are used for the shortest outreaches. The only way to adjust them is to install washers underneath. They can be used for interiors where additional insulation is not required or exteriors if insulation is hidden somewhere inside the wall.

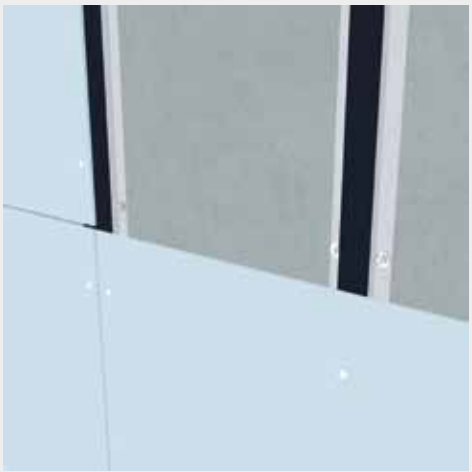

Budynki mieszkalne "Gotycka", Warszawa

ARTRYS TOP HAT PROFILE - AOP A

NON-STANDARD PROFILES

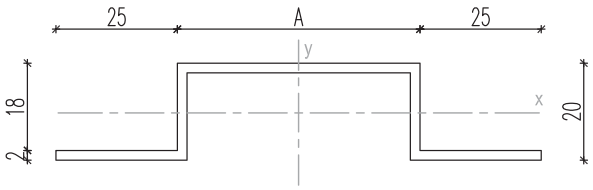

Profile type	A [mm]
ARTRYS TOP HAT PROFILE - AOP 50	50
ARTRYS TOP HAT PROFILE - AOP 100	100

Material
ALUMINIUM EN AW 6060 T6/T66

Profile AOP 50 specification	
Jx = 1,83 cm^4	Jy = 20,82 cm^4
Wx = 1,78 cm^3	Wy= 4,16 cm^3
A = 2,72 cm^2	Weight= 0,74 kg/m

Profile AOP 100 specification	
Jx = 2,46 cm^4	Jy = 73,54 cm^4
Wx = 2,01 cm^3	Wy= 9,81 cm^3
A = 3,72 cm^2	Weight = 1,01 kg/m

WALL WITHOUT INSULATION - INVISIBLE FIXING

NON-STANDARD PROFILES

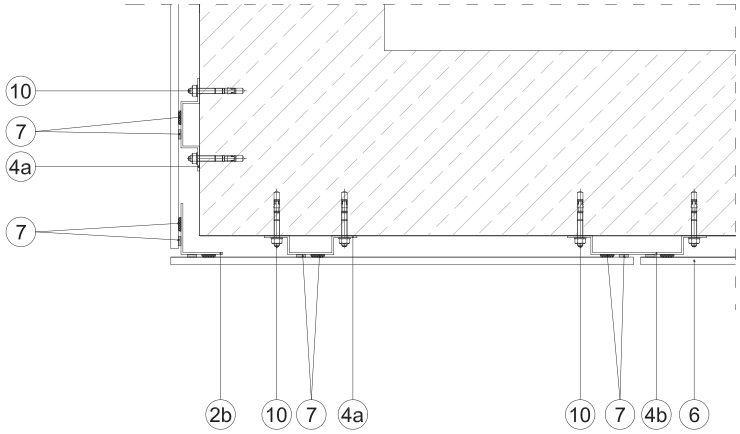

2b.	ARTRYS L PROFILE - ALP 45/55/2
4a.	ARTRYS TOP HAT PROFILE - AOP 50
4b.	ARTRYS TOP HAT PROFILE - AOP 100
6.	CLADDING PANEL
7.	ADHESIVE SYSTEM
10.	ANCHOR

WALL WITHOUT INSULATION - VISIBLE FIXING

NON-STANDARD PROFILES

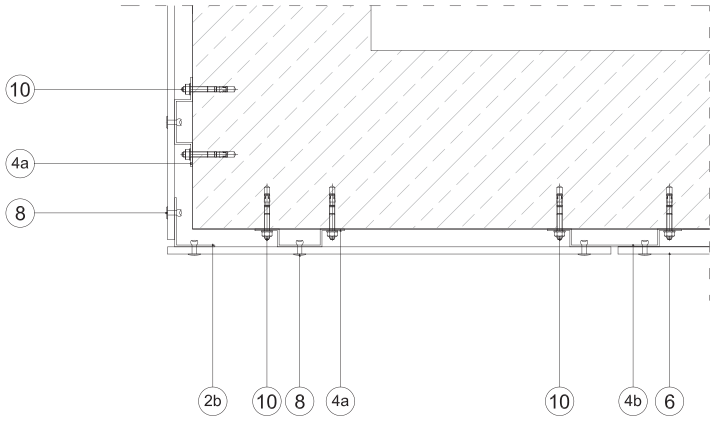

2b.	ARTRYS L PROFILE - ALP 45/55/2
4a.	ARTRYS TOP HAT PROFILE - AOP 50
4b.	ARTRYS TOP HAT PROFILE - AOP 100
6.	CLADDING PANEL
8.	RIVET
10.	ANCHOR

ACP1 CORNER PROFILE

NON-STANDARD PROFILES:

THE ACP1 EXTERNAL CORNER PROFILE is used for aesthetic finishing and covering on the sides of cladding panels. The profile can be coated in a variety of colours.

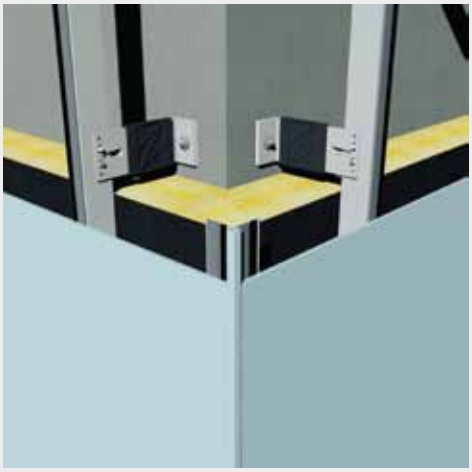

Metro Wilanowska, Warszawa

ARTRYS CORNER PROFILE - ACP1

NON-STANDARD PROFILES

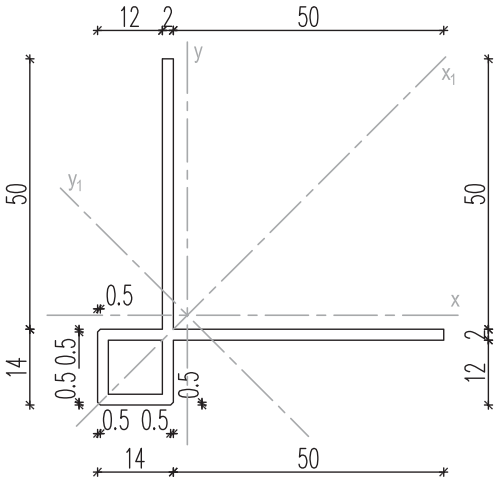

Profile AGP specification	
Jx = 8,34 cm^4	Jy = 8,34 cm^4
Jx_1 = 9,08 cm^4	Jy_1 = 6,99 cm^4
Wx = 1,76 cm^3	Wy = 1,76 cm^3
Wx_1 = 2,46 cm^3	Wy_1 = 2,21 cm^3
A = 2,96 cm^2	Weight = 0,81 kg/m

Material
ALUMINIUM EN AW 6060 T6/T66

WINDOW HEAD AND SILL SECTION

NON-STANDARD PROFILES

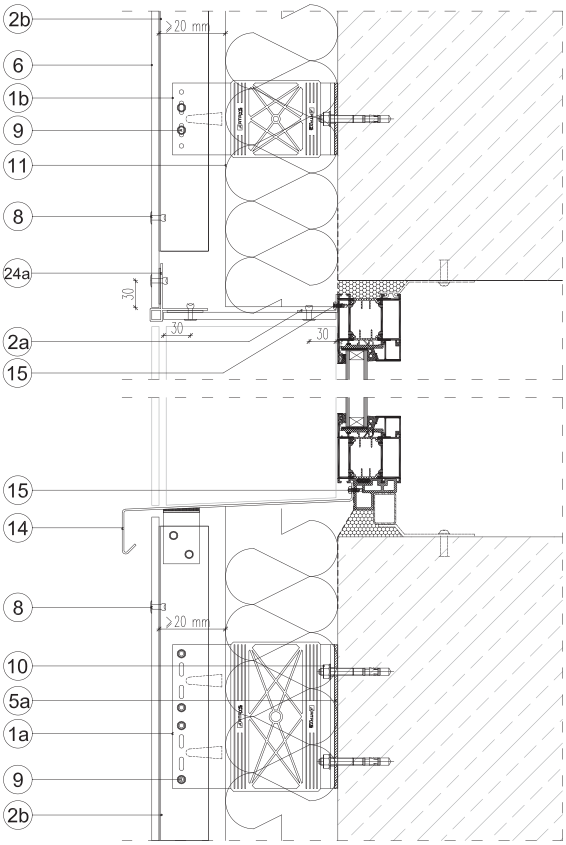

1a.	ARTRYS BRACKET LARGE PASSIVE - BLP X
1b.	ARTRYS BRACKET MEDIUM PASSIVE - BMP X
2a.	ARTRYS L PROFILE - ALP 45/20/2
2b.	ARTRYS L PROFILE - ALP 45/55/2
5a.	LARGE WASHER - PVC L
5b.	MEDIUM WASHER - PVC M
6.	CLADDING PANEL
8.	RIVET
9.	SELF-DRILLING SCREW
10.	ANCHOR
11.	MINERAL WOOL WITH TISSUE
14.	WINDOW SILL
15.	SELF-DRILLING SCREW
24a.	ARTRYS CORNER PROFILE - ACP1

WINDOW JAMB PLAN

NON-STANDARD PROFILES

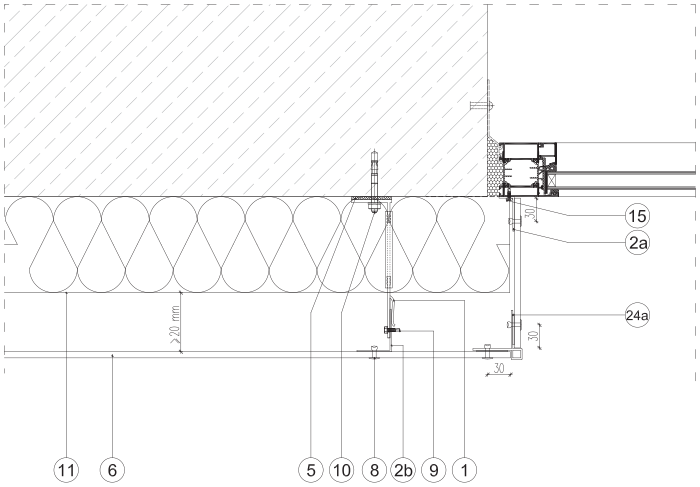

1.	ARTRYS BRACKET PASSIVE - BLP X/BMP X
2a.	ARTRYS L PROFILE - ALP 45/20/2
2b.	ARTRYS L PROFILE - ALP 45/55/2
5.	WASHER - PVC L/PVC M
6.	CLADDING PANEL
8.	RIVET
9.	SELF-DRILLING SCREW
10.	ANCHOR
11.	MINERAL WOOL WITH TISSUE
15.	SELF-DRILLING SCREW
24a.	ARTRYS CORNER PROFILE - ACP1

ACP2 CORNER PROFILE AND AG210 GRIP

NON-STANDARD PROFILES:

The ACP2 PROFILE AND THE AG210 GRIP are used together in corner sections of the facade and were designed with the face/ fixing method in mind. This system allows one column of the rivets to be fixed closer to the panel edge (according to the manufacturer's requirements) and brackets to be fixed at the right distance from the edge of the wall. The end result is aesthetically pleasing as the visible rivets are equally spaced.

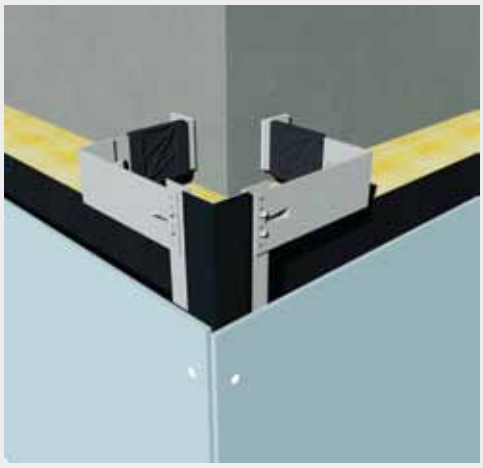

WFOŚiGW, Łódź

ARTRYS CORNER PROFILE - ACP2

NON-STANDARD PROFILES

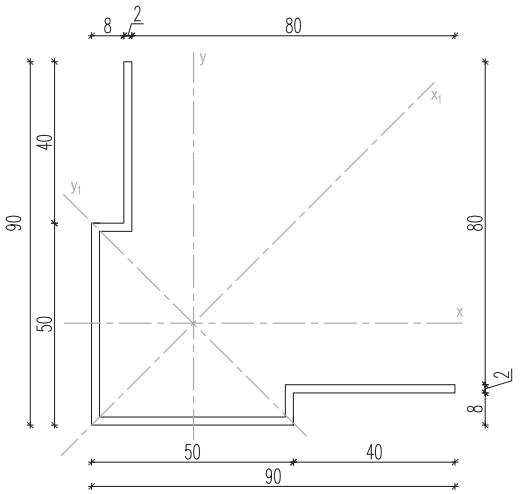

Profile ACP2 specification	
Jx = 28,44 cm^4	Jy = 28,44 cm^4
Jx_1 = 41,65 cm^4	Jy_1 = 15,23 cm^4
Wx = 4,39 cm^3	Wy = 4,39 cm^3
Wx_1 = 7,18 cm^3	Wy_1 = 4,35 cm^3
A = 3,88 cm^2	Weight = 1,06 kg/m

Material
ALUMINIUM EN AW 6060 T6/T66

ARTRYS CORNER GRIP LARGE - AGL210

NON-STANDARD PROFILES

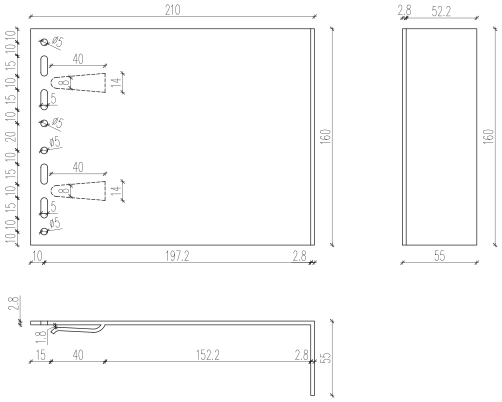

Material
ALUMINIUM EN AW 6060 T6

ARTRYS CORNER GRIP MEDIUM - AGM210

NON-STANDARD PROFILES

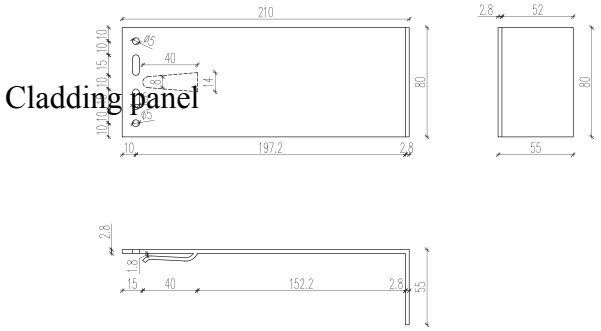

Material
ALUMINIUM EN AW 6060 T6

EXTERNAL CORNER PLAN

NON-STANDARD PROFILES

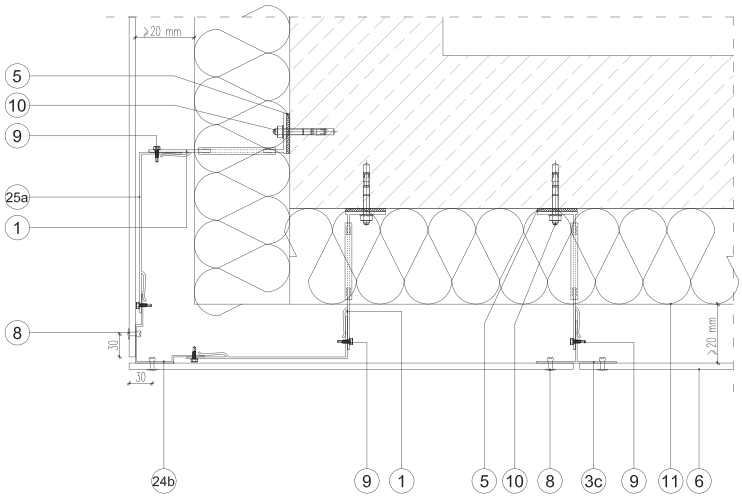

1.	ARTRYS BRACKET PASSIVE - BLP X/BMP X
2a.	ARTRYS L PROFILE - ALP 45/20/2
2b.	ARTRYS L PROFILE - ALP 45/55/2
3c.	ARTRYS T PROFILE - ATP 105/55/2
5.	WASHER - PVC L/PVC M
6.	CLADDING PANEL
8.	RIVET
9.	SELF-DRILLING SCREW
10.	ANCHOR
11.	MINERAL WOOL WITH TISSUE
24b.	ARTRYS CORNER PROFILE - ACP2
25a.	ARTRYS CORNER GRIP - AGL210/AGM210

ACP3 CORNER PROFILE AND AG80 GRIP

NON-STANDARD PROFILES:

THE ACP3 CORNER PROFILE, AND THE AG80 GRIP are used together in window reveal sections. Just like in the case of the ACP2 + AG210 system, they enable rivets to be fixed at the correct distances from the edges of the panel, making the whole assembly more aesthetically pleasing.

Osiedle Nowomińskie, Mińsk Mazowiecki

ARTRYS CORNER PROFILE - ACP3

NON-STANDARD PROFILES

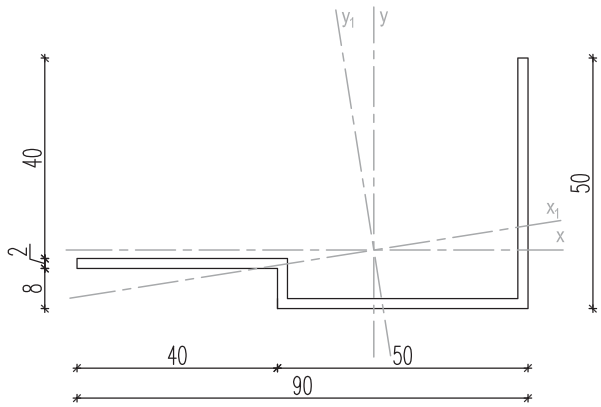

Profile ACP3 specification	
Jx = 3,75 cm^4	Jy = 23,92 cm^4
Jx_1 = 3,20 cm^4	Jy_1 = 24,48 cm^4
Wx = 1,09 cm^3	Wy = 4,09 cm^3
Wx_1 = 1,09 cm^3	Wy_1 = 4,21 cm^3
A = 2,82 cm^2	Weight = 0,77 kg/m

Material
ALUMINIUM EN AW 6060 T6/T66

ARTRYS CORNER GRIP LARGE - AGL80

NON-STANDARD PROFILES

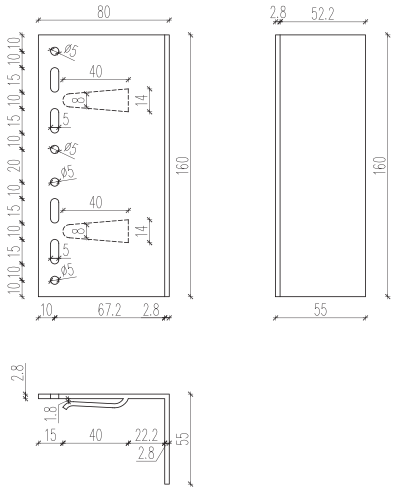

Material
ALUMINIUM EN AW 6060 T6

ARTRYS CORNER GRIP MEDIUM - AGM80

NON-STANDARD PROFILES

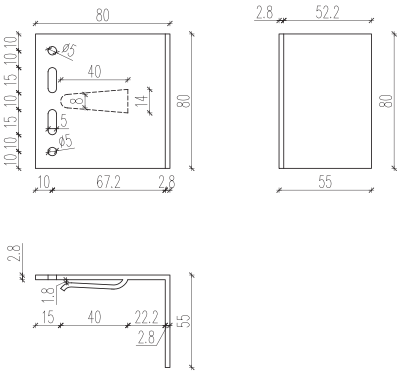

Material
ALUMINIUM EN AW 6060 T6

WINDOW JAMB PLAN

NON-STANDARD PROFILES

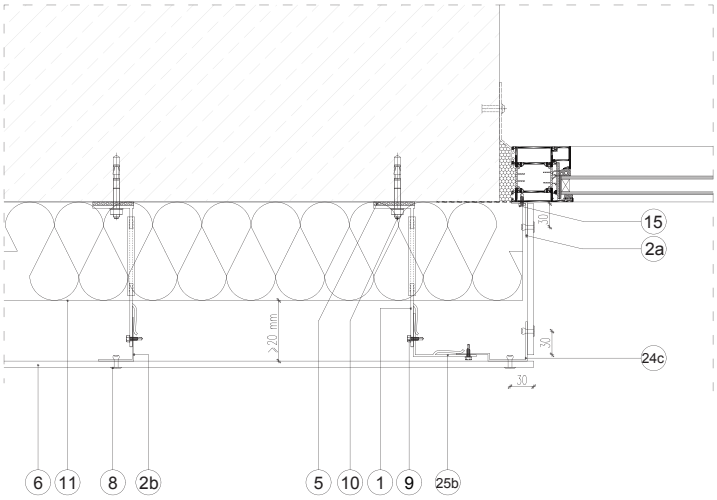

1.	ARTRYS BRACKET PASSIVE - BLP X/BMP X
2a.	ARTRYS L PROFILE - ALP 45/20/2
2b.	ARTRYS L PROFILE - ALP 45/55/2
5.	WASHER - PVC L/PVC M
6.	CLADDING PANEL
8.	RIVET
9.	SELF-DRILLING SCREW
10.	ANCHOR
11.	MINERAL WOOL WITH TISSUE
15.	SELF-DRILLING SCREW
24c.	ARTRYS CORNER PROFILE - ACP3
25b.	ARTRYS CORNER GRIP - AGL80/AGM80

AWP1 AND AWP2 WINDOW PROFILES

NON-STANDARD PROFILES:

THE AWP1 AND AWP2 WINDOW PROFILES allow cladding panels up to 4 mm thick to be installed as window reveals. It enables panels to be adjusted in a range of 20 mm and can be coated in any colour.

Budynek Starostwa PWZ, Ożarów Mazowiecki

ARTRYS WINDOW PROFILE - AWP1

NON-STANDARD PROFILES

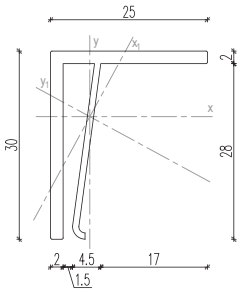

Profile AWP1specification	
Jx = 1,27 cm^4	Jy = 0,62 cm^4
Jx_1 = 0,35 cm^4	Jy_1 = 1,53 cm^4
Wx = 0,65 cm^3	Wy = 0,33 cm^3
Wx_1 = 0,28 cm^3	Wy_1 = 0,76 cm^3
A = 1,34 cm^2	Weight = 0,36 kg/m

Material
ALUMINIUM EN AW 6060 T6/T66

ARTRYS WINDOW PROFILE - AWP2

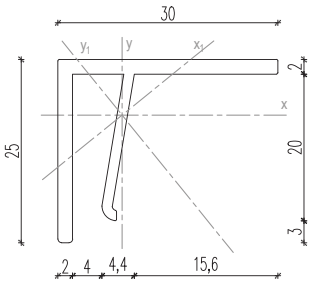

Profile AWP2 specification	
Jx = 0,77 cm^4	Jy = 0,98 cm^4
Jx_1 = 0,44 cm^4	Jy_1 = 1,32 cm^4
Wx = 0,44 cm^3	Wy = 0,48 cm^3
Wx_1 = 0,35 cm^3	Wy_1 = 0,64 cm^3
A = 1,34 cm^2	Weight = 0,36 kg/m

Material
ALUMINIUM EN AW 6060 T6/T66

WINDOW HEAD AND SILL SECTION

NON-STANDARD PROFILES

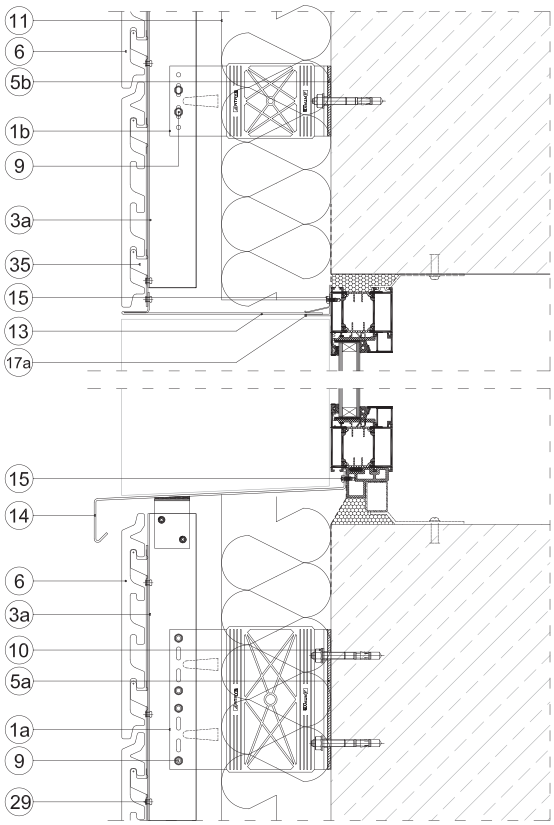

1a.	ARTRYS BRACKET LARGE PASSIVE - BLP X
1b.	ARTRYS BRACKET MEDIUM PASSIVE - BMP X
3a.	ARTRYS PROFILE - ATP 75/55/2
5a.	LARGE WASHER - PVC L
5b.	MEDIUM WASHER - PVC M
6.	CLADDING PANEL
9.	SELF-DRILLING SCREW
10.	ANCHOR
11.	MINERAL WOOL WITH TISSUE
13.	FLASHING
14.	WINDOW SILL
15.	SELF-DRILLING SCREW
17a.	ARTRYS WINDOW PROFILE - AWP1
29.	RIVET

PLAN WINDOW JAMB

NON-STANDARD PROFILES

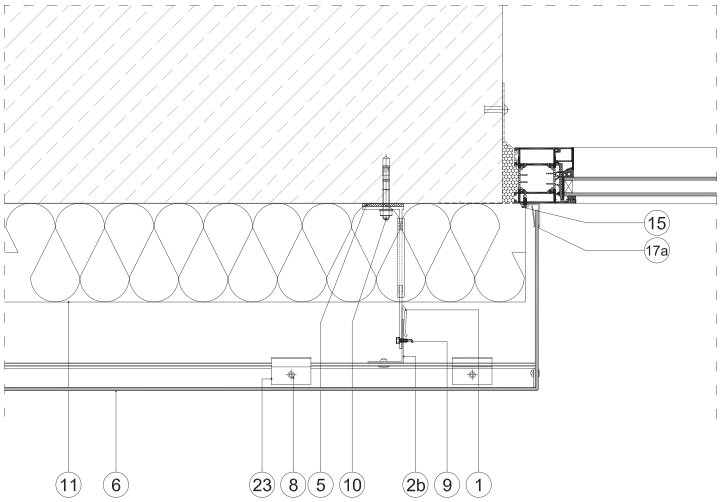

1.	ARTRYS BRACKET PASSIVE - BLP X/BMP X
2b.	ARTRYS L PROFILE - ALP 45/55/2
5.	WASHER - PVC L / PVC M
6.	CLADDING PANEL
8.	RIVET
9.	SELF-DRILLING SCREW
10.	ANCHOR
11.	MINERAL WOOL WITH TISSUE
15.	SELF-DRILLING SCREW
17a.	ARTRYS WINDOW PROFILE - AWP1
23.	ARTRYS HOLDER - AV

AWP3 WINDOW PROFILE

NON-STANDARD PROFILES:

THE AWP3 WINDOW PROFILE allows cladding panels up to 8 mm thick to be installed as window reveals. It enables panels to be adjusted in a range of 20 mm and can be coated in any colour.

Koneser, Warszawa

ARTRYS WINDOW PROFILE - AWP3

NON-STANDARD PROFILES

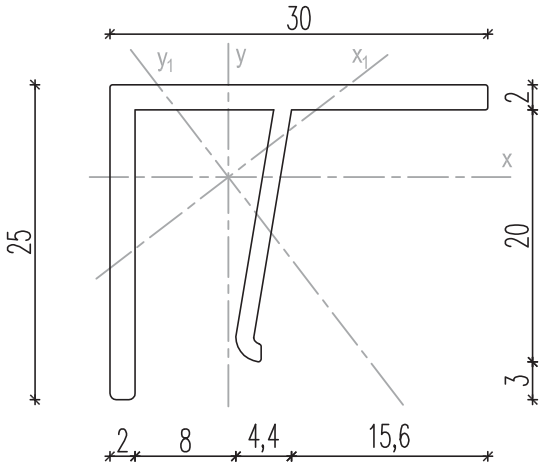

Profile AWP3 specification	
Jx = 0,77 cm^4	Jy = 0,96 cm^4
Jx_1 = 0,38 cm^4	Jy_1 = 1,36 cm^4
Wx = 0,44 cm^3	Wy = 0,45 cm^3
Wx_1 = 0,34 cm^3	Wy_1 = 0,64 cm^3
A = 1,34 cm^2	Weight = 0,36 kg/m

Material
ALUMINIUM EN AW 6060 T6/T66

SECTION WINDOW HEAD AND SILL

NON-STANDARD PROFILES

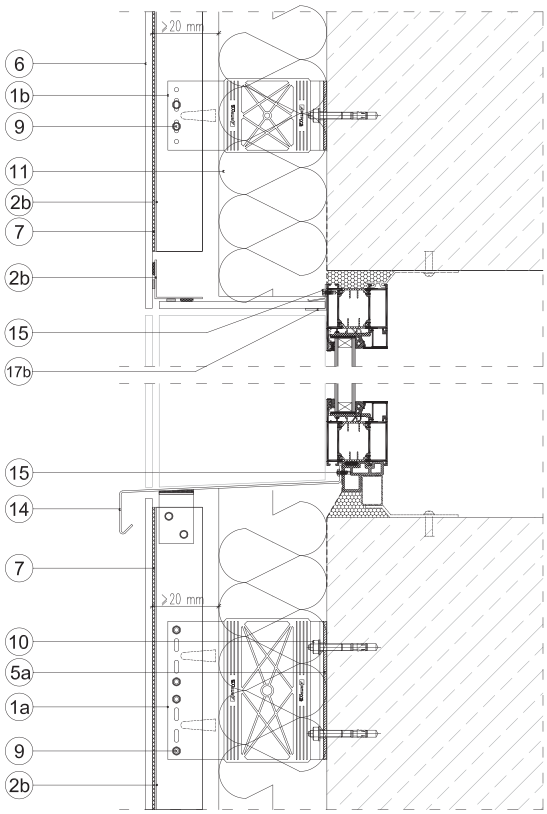

1a.	ARTRYS BRACKET LARGE PASSIVE - BLP X
1b.	ARTRYS BRACKET MEDIUM PASSIVE - BMP X
2b.	ARTRYS L PROFILE - ALP 45/55/2
5a.	LARGE WASHER - PVC L
5b.	MEDIUM WASHER - PVC M
6.	CLADDING PANEL
8.	RIVET
9.	SELF-DRILLING SCREW
10.	ANCHOR
11.	MINERAL WOOL WITH TISSUE
14.	WINDOW SILL
15.	SELF-DRILLING SCREW
17b.	ARTRYS WINDOW PROFILE - AWP3

PLAN WINDOW JAMB

NON-STANDARD PROFILES

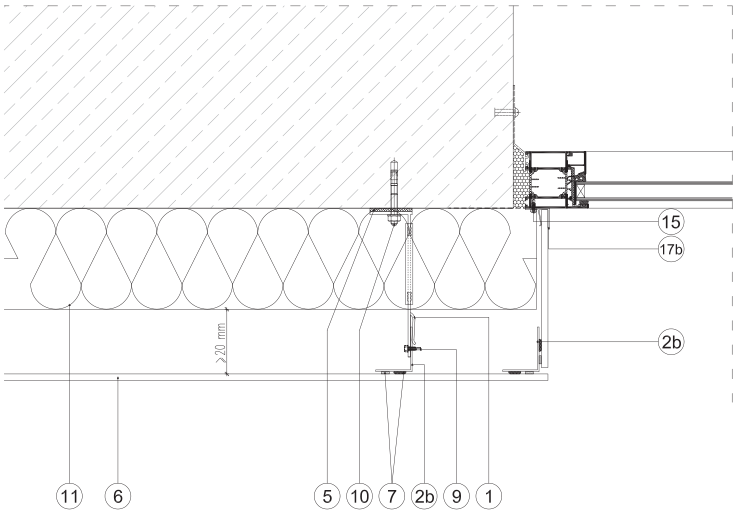

1.	ARTRYS BRACKET PASSIVE - BLP X/BMP X
2b.	ARTRYS L PROFILE - ALP 45/55/2
5.	WASHER - PVC L/PVC M
6.	CLADDING PANEL
8.	RIVET
9.	SELF-DRILLING SCREW
10.	ANCHOR
11.	MINERAL WOOL WITH TISSUE
15.	SELF-DRILLING SCREW
17b.	ARTRYS WINDOW PROFILE - AWP3

ALP SUPPORT PROFILES

NON-STANDARD PROFILES:

THE ALP REINFORCED PROFILES are used to support the side of the panel that is away from the edge of the wall. Such situations occur when the ventilated facade installed on one of the walls has to cover the side of the plaster facade on the other wall. The long side of the ALP profile makes it possible to reach the edge of the cladding panel even if the bracket is fixed further away.

Centrum Laboratoryjne Nauk Przyrodniczych UKSW, Warszawa

ARTRYS SUPPORT PROFILE - ALP A/55/2,8

NON-STANDARD PROFILES

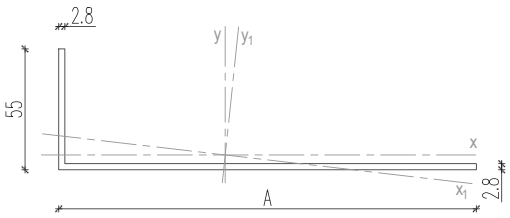

Profile type	A[mm]
ARTRYS L PROFILE - ALP 210/55/2,8	210
ARTRYS L PROFILE - ALP 160/55/2,8	160
ARTRYS L PROFILE - ALP 80/55/2,8	80

Material
ALUMINIUM EN AW 6060 T6/T66

Profile **ALP 210/55/2,8** specification	
$Jx = 12,21\ cm^4$	$Jy = 341,74\ cm^4$
$Jx_1 = 8,88\ cm^4$	$Jy_1 = 345,08\ cm^4$
$Wx = 2,53\ cm^3$	$Wy = 27,21\ cm^3$
$Wx_1 = 2,26\ cm^3$	$Wy_1 = 27,45\ cm^3$
$A = 7,34\ cm^2$	Weight = 2,00 kg/m

Profile **ALP 160/55/2,8** specification	
$Jx = 11,68\ cm^4$	$Jy = 163,67\ cm^4$
$Jx_1 = 8,04\ cm^4$	$Jy_1 = 167,31\ cm^4$
$Wx = 2,50\ cm^3$	$Wy = 16,48\ cm^3$
$Wx_1 = 2,16\ cm^3$	$Wy_1 = 16,83\ cm^3$
$A = 5,94\ cm^2$	Weight = 1,62 kg/m

Profile **ALP 80/55/2,8** specification	
$Jx = 10,02\ cm^4$	$Jy = 25,13\ cm^4$
$Jx_1 = 5,53\ cm^4$	$Jy_1 = 29,63\ cm^4$
$Wx = 2,35\ cm^3$	$Wy = 4,55\ cm^3$
$Wx_1 = 1,92\ cm^3$	$Wy_1 = 5,39\ cm^3$
$A = 3,70\ cm^2$	Weight = 1,01 kg/m

PLASTER FACADE JUNCTION - VISIBLE FIXING

NON-STANDARD PROFILES

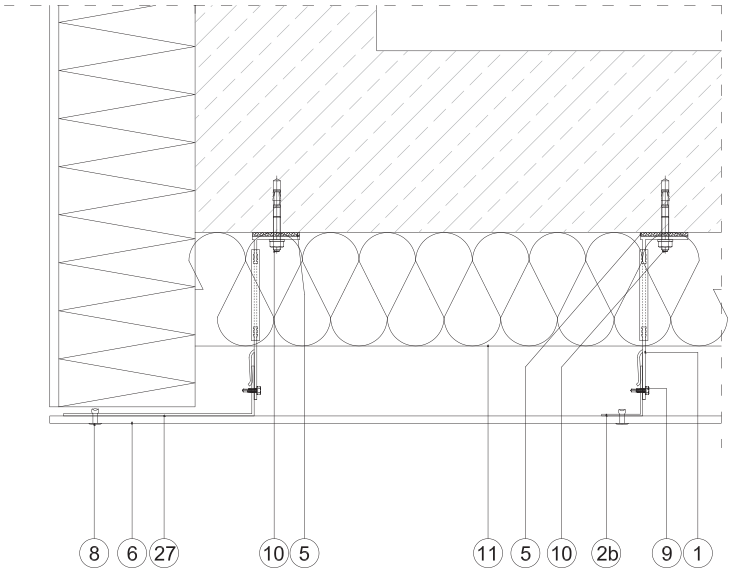

1. ARTRYS BRACKET PASSIVE - BLP X/BMP X
2b. ARTRYS L PROFILE - ALP 45/55/2
5. WASHER - PVC L/PVC M
6. CLADDING PANEL
8. RIVET
9. SELF-DRILLING SCREW
10. ANCHOR
11. MINERAL WOOL WITH TISSUE
27. ARTRYS SUPPORT PROFILE - ALP A

PLASTER FACADE JUNCTION - INVISIBLE FIXING

NON-STANDARD PROFILES

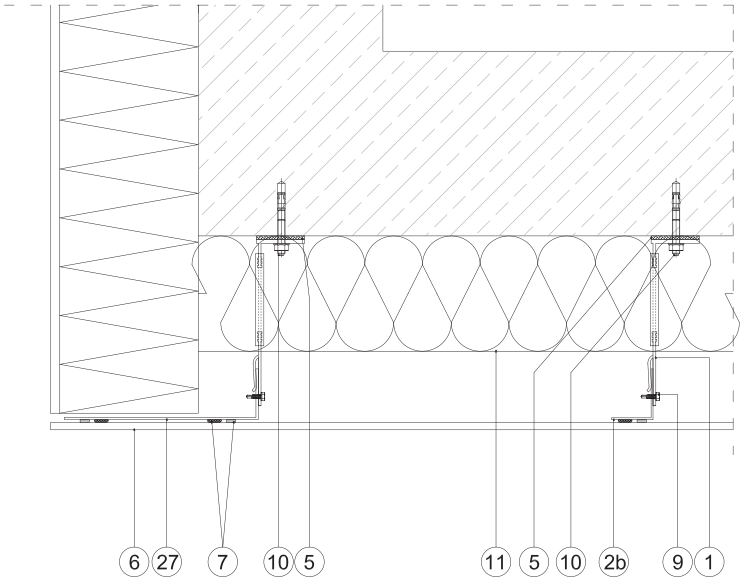

1. ARTRYS BRACKET PASSIVE - BLP X/BMP X
2b. ARTRYS L PROFILE - ALP 45/55/2
5. WASHER - PVC L/PVC M
6. CLADDING PANEL
7. ADHESIVE SYSTEM
9. SELF-DRILLING SCREW
10. ANCHOR
11. MINERAL WOOL WITH TISSUE
27. ARTRYS SUPPORT PROFILE - ALP A

HANGING SYSTEM

MECHANICAL FASTENERS:

THE HANGING SYSTEM has been designed to enable concealed mechanical fixing. AGP continuous profiles are fixed to the main structure or directly to the wall (if there is no insulation). Shorter pieces of the same profile (called AG hooks/hangers) are rotated and fixed to the back of the cladding panel with under-cut anchors. A socket in the upper part of the AG hooks is used for levelling panels with a screw and a nut. The biggest benefit of this system is that panels can be installed regardless of the season and have an identical visual effect to adhesive systems and the strength of mechanical fixing.

Dom Awangarda
Warszawa

ARTRYS GRIP PROFILE - AGP

HANGING SYSTEM

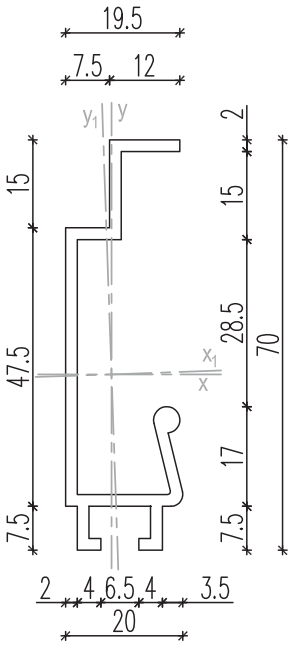

Profile AGP specification	
Jx = 13,94 cm^4	Jy = 1,19 cm^4
Jx_1 = 13,95 cm^4	Jy_1 = 1,18 cm^4
Wx = 3,49 cm^3	Wy = 0,98 cm^3
Wx_1 = 3,49 cm^3	Wy_1 = 0,90 cm^3
A = 2,71 cm^2	Masa = 0,74 kg/m

Material

ALUMINIUM EN AW 6060 T6/T66

ARTRYS GRIP - AG

HANGING SYSTEM

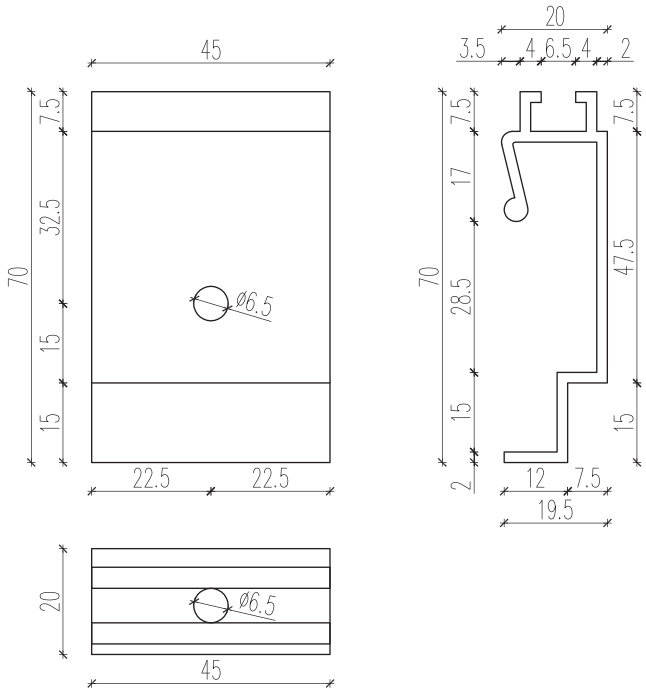

Material

ALUMINIUM EN AW 6060 T6/T66

ATTIC JUNCTION AND PANEL BASE

HANGING SYSTEM

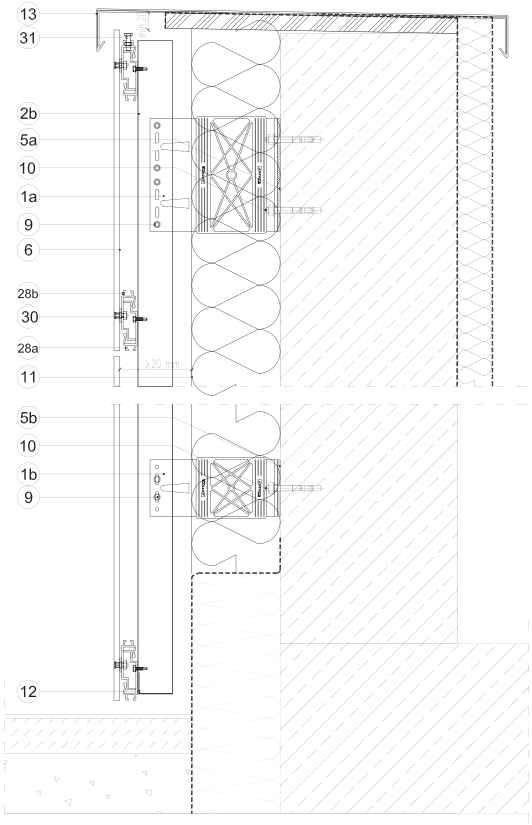

1a.	ARTRYS BRACKET LARGE PASSIVE - BLP X
1b.	ARTRYS BRACKET MEDIUM PASSIVE - BMP X
2b.	ARTRYS L PROFILE - ALP 45/55/2
5a.	ISOLATOR LARGE - PVC L
5b.	ISOLATOR MEDIUM - PVC M
6.	CLADDING PANEL
9.	SELF-DRILLING SCREW
10.	ANCHOR
11.	MINERAL WOOL WITH TISSUE
12.	PERFORATED PROFILE
13.	FLASHING
28a.	ARTRYS GRIP PROFILE - AGP
28b.	ARTRYS GRIP - AG
30.	UNDER-CUT ANCHOR
31.	ADJUSTMENT SCREW

PLAN CORNER DETAIL

HANGIN SYSTEM

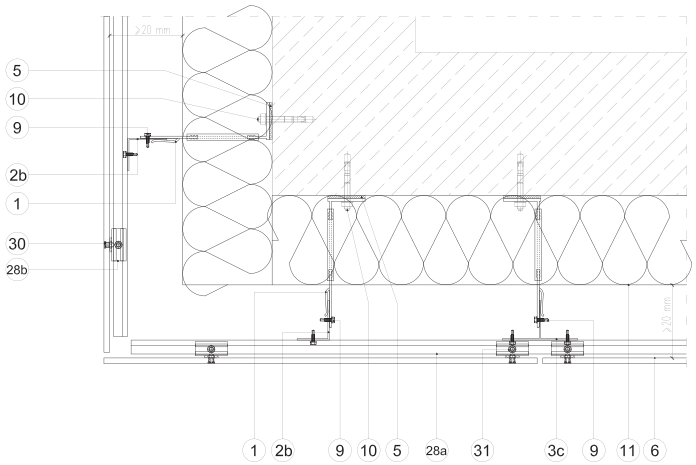

1.	ARTRYS BRACKET PASSIVE - BLP X/BMP X
2b.	ARTRYS L PROFILE - ALP 45/55/2
3c.	ARTRYS T PROFILE - ATP 105/55/2
5.	ISOLATOR - PVC L/PVC M
6.	CLADDING PANEL
9.	SELF-DRILLING SCREW
10.	ANCHOR
11.	MINERAL WOOL WITH TISSUE
28a.	ARTRYS GRIP PROFILE - AGP
28b.	ARTRYS GRIP - AG
30.	UNDER-CUT ANCHOR
31.	ADJUSTMENT SCREW

HANGING SYSTEM

SYSTEMS FOR MECHANICAL FIXING OF CERAMIC AND STONE CLADDING PANELS

Artrys subframe systems are used to fix various types of ceramic and stone cladding panels. One of the most common ways to do so is to attach stainless steel holders to our vertical profiles. Coated in colours that match the cladding panels, the holders are barely noticeable. Openings in the holders enable them to be fixed through joints, which makes disassembly easy, if necessary.

One of the examples of how to fix ceramic tiles is the Tonality (BAS) clamping rails system designed specifically for Creaton panels. Profiles with holders are fixed to vertical aluminium profiles and a panel with a grooved back is later hanged on them. Decorative profiles help to cover the visible edges of panels. In 2017, the Artrys subframe system, together with the Tonality system were tested in The Building Research Institute. The appendix to Technical Approval no. AT-i 5-8577/201 confirms compatibility of the systems.

ICBN KUL
Lublin

ATTIC JUNCTION AND PANEL BASE

CERAMIC CLADDING PANELS

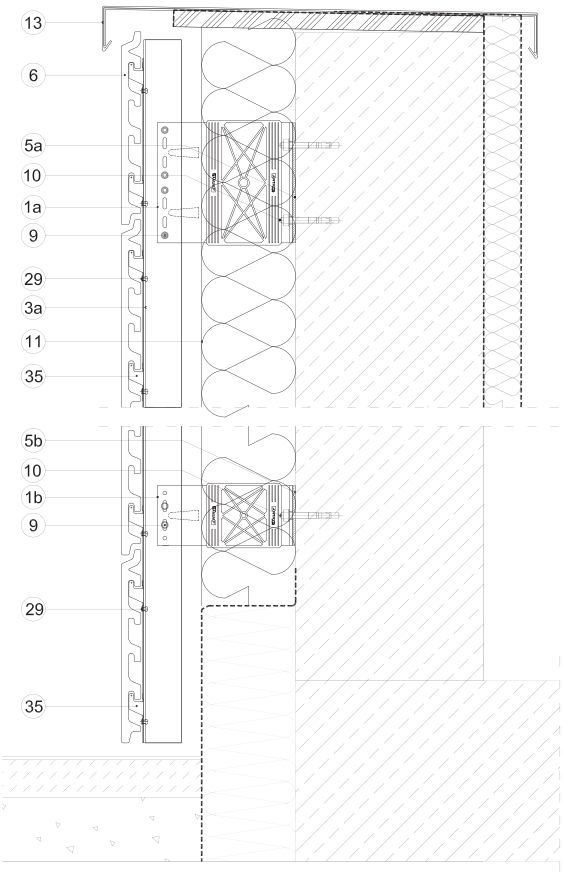

1a.	ARTRYS BRACKET LARGE PASSIVE - BLP X
1b.	ARTRYS BRACKET MEDIUM PASSIVE - BMP X
3a.	ARTRYS T PROFILE - ATP 75/55/2
5a.	ISOLATOR LARGE - PVC L
5b.	ISOLATOR MEDIUM - PVC M
6.	CLADDING PANEL
9.	SELF-DRILLING SCREW
10.	UNDER-CUT ANCHOR
11.	MINERAL WOOL WITH TISSUE
13.	FLASHING
29.	RIVET
35.	BAS CREATON JOINT PROFILE

PLAN CORNER DETAIL

CERAMIC CLADDING PANELS

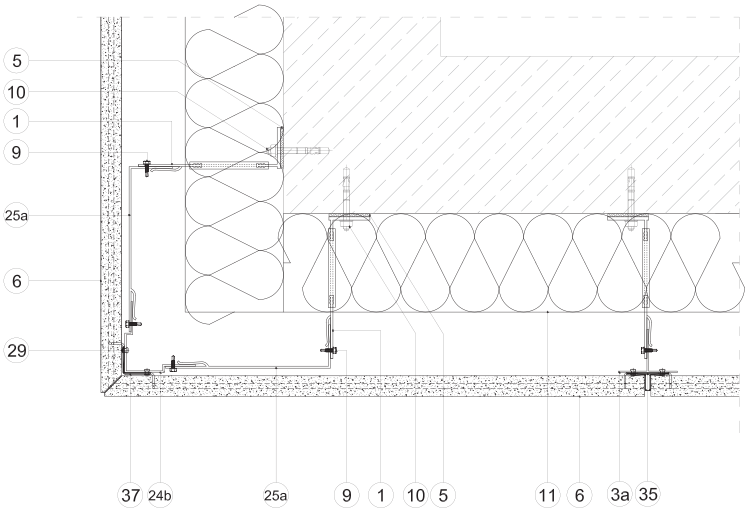

1.	ARTRYS BRACKET PASSIVE - BLP X/BMP X
3a.	ARTRYS T PROFILE - ATP 75/55/2
5.	ISOLATOR - PVC L/PVC M
6.	CLADDING PANEL
9.	SELF-DRILLING SCREW
10.	UNDER-CUT ANCHOR
11.	MINERAL WOOL WITH TISSUE
24b.	ARTRYS CORNER PROFILE – ACP2
25a.	ARTRYS CORNER GRIP – AGL210/AGM210
29.	RIVET
35.	BAS CREATON JOINT PROFILE
37.	BAS CREATON CORNER PROFILE

WINDOW HEAD AND SILL SECTION

CERAMIC CLADDING PANELS

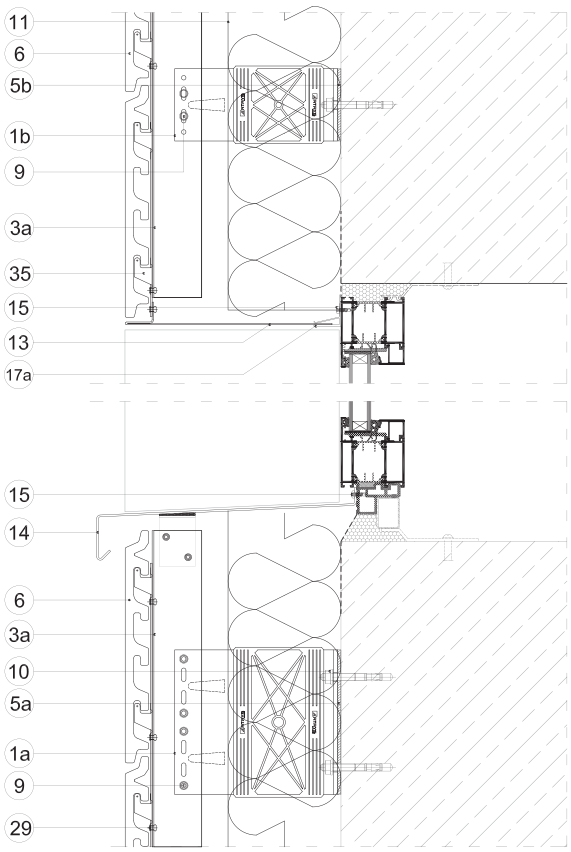

1a.	ARTRYS BRACKET LARGE PASSIVE - BLP X
1b.	ARTRYS BRACKET MEDIUM PASSIVE - BMP X
3a.	ARTRYS T PROFILE - ATP 75/55/2
5a.	ISOLATOR LARGE - PVC L
5b.	ISOLATOR MEDIUM - PVC M
6.	CLADDING PANEL
9.	SELF-DRILLING SCREW
10.	UNDER-CUT ANCHOR
11.	MINERAL WOOL WITH TISSUE
13.	FLASHING
14.	WINDOW SILL
15.	SELF-DRILLING SCREW
17a.	ARTRYS WINDOW PROFILE - AWP1
29.	RIVET
35.	BAS CREATON JOINT PROFILE

PLAN WINDOW JAMB

CERAMIC CLADDING PANELS

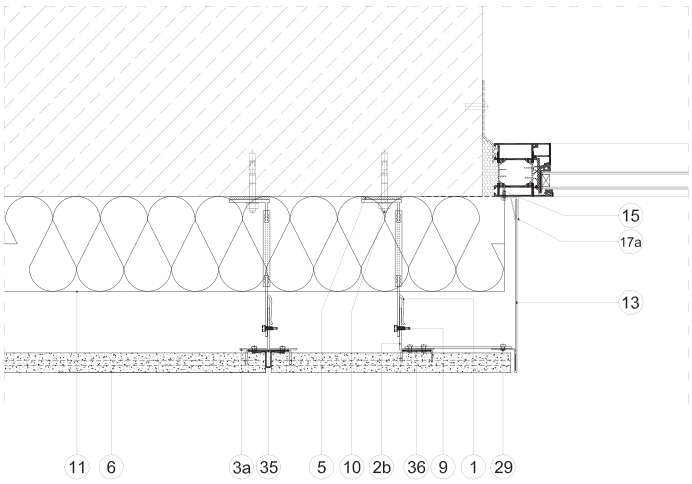

1.	ARTRYS BRACKET PASSIVE BLP X/BMP X
2b.	ARTRYS L PROFILE – ALP 55/45/2
3a.	ARTRYS T PROFILE - ATP 75/55/2
5.	ISOLATOR - PVC L/PVC M
6.	CLADDING PANEL
9.	SELF-DRILLING SCREW
10.	UNDER-CUT ANCHOR
11.	MINERAL WOOL WITH TISSUE
13.	FLASHING
15.	SELF-DRILLING SCREW
17a.	ARTRYS WINDOW PROFILE - AWP1
29.	RIVET
35.	BAS CREATON JOINT PROFILE
36.	BAS CREATON END RAIL

WINDOW HEAD AND SILL SECTION

STONE CLADDING PANELS

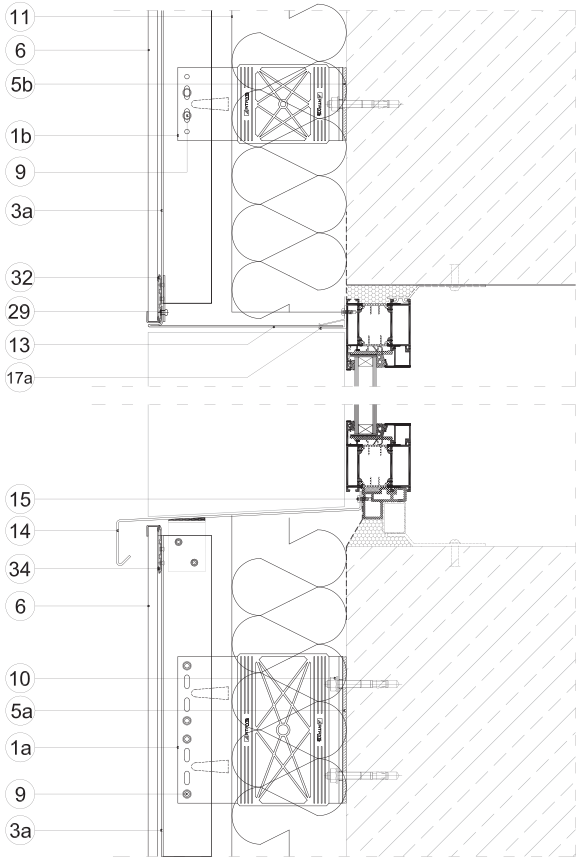

1a.	ARTRYS BRACKET LARGE PASSIVE - BLP X
1b.	ARTRYS BRACKET MEDIUM PASSIVE - BMP X
3a.	ARTRYS T PROFILE - ATP 75/55/2
5a.	ISOLATOR LARGE - PVC L
5b.	ISOLATOR MEDIUM - PVC M
6.	CLADDING PANEL
9.	SELF-DRILLING SCREW
10.	UNDER-CUT ANCHOR
11.	MINERAL WOOL WITH TISSUE
13.	FLASHING
14.	WINDOW SILL
15.	SELF-DRILLING SCREW
17a.	ARTRYS WINDOW PROFILE - AWP1
29.	RIVET
32.	START CLAMP
34.	END CLAMP

PLAN WINDOW JAMB

STONE CLADDING PANELS

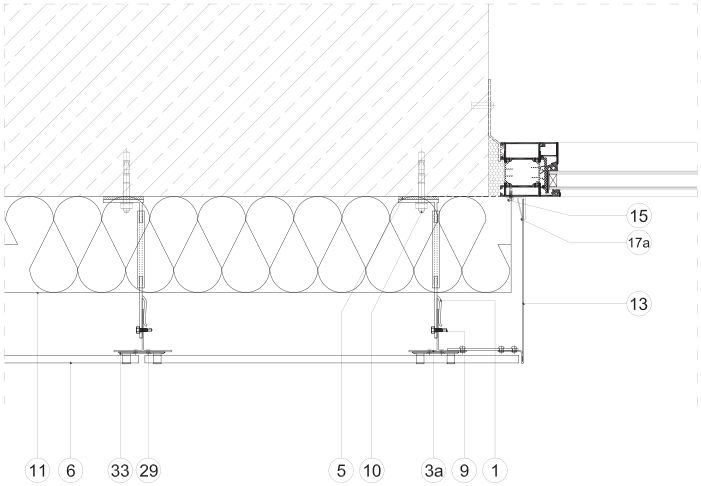

1.	ARTRYS BRACKET PASSIVE BLP X/BMP X
3a.	ARTRYS T PROFILE - ATP 75/55/2
5.	ISOLATOR - PVC L/PVC M
6.	CLADDING PANEL
9.	SELF-DRILLING SCREW
10.	ANCHOR
11.	MINERAL WOOL WITH TISSUE
13.	FLASHING
15.	SELF-DRILLING SCREW
17a.	ARTRYS WINDOW PROFILE - AWP1
29.	RIVET
33.	JOINT CLAMP

ALUMINIUM LOUVERS

The aluminium louvers system helps to protect areas exposed to the sun without disturbing the airflow.The ALP50 aluminium louvers can simply be clicked into the AGP50 mounting profile, allowing for fast and easy installation. Both elements can be coated a in desired colour.

Wola Tarasy, Warszawa

ARTRYS LOUVRE SYSTEM - ALS50

ALUMINIUM LOUVERS

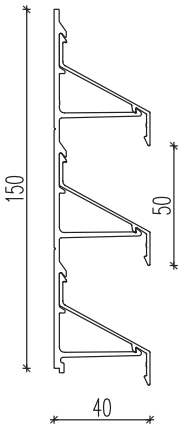

Louvre ALS50 specification	
PHYSICAL CROSS-SECTION	65%
OPTICAL CROSS-SECTION	72%
STANDARD WIDTH OF AGP50 ELEMENT	30 MM
THE WIDTH OF AGP50 ELEMENT ON/ THE JOINT	60 MM
THE MAXIMUM SPAN BETWEEN LOUVERS SUPPORT	1.2 M
THE MAXIMUM LENGTH OF THE ALP50 PROFILE	6.0 M
THE MAXIMUM LENGTH OF THE AGP50 PROFILE	3.0 M

Material
ALUMINIUM EN AW 6060 T6/T66

ARTRYS COMB PROFILE - AGP50

ALUMINIUM LOUVERS

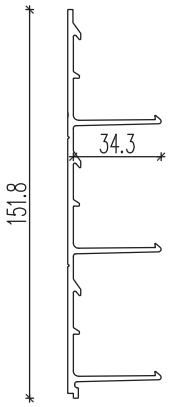

Material
ALUMINIUM EN AW 6060 T6/T66

ARTRYS LAMELA PROFILE - ALP50

ALUMINIUM LOUVERS

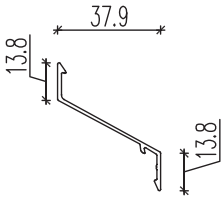

Material
ALUMINIUM EN AW 6060 T6/T66

LOUVER SYSTEM FASTENING - ALS50

ALUMINIUM LOUVERS

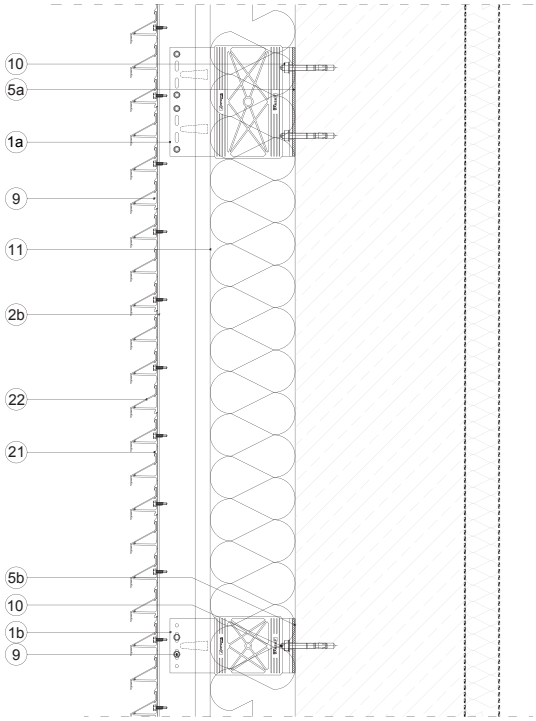

1a.	ARTRYS BRACKET LARGE PASSIVE - BLP X
1b.	ARTRYS BRACKET MEDIUM PASSIVE - BMP X
2b.	ARTRYS L PROFILE - ALP 45/55/2
5a.	ISOLATOR LARGE - PVC L
5b.	ISOLATOR MEDIUM - PVC M
9.	SELF-DRILLING SCREW
10.	ANCHOR
11.	MINERAL WOOL WITH TISSUE
15.	SELF-DRILLING SCREW
21.	ARTRYS COMB PROFILE - AGP50
22.	ARTRYS LOUVER PROFILE - ALP50

ALUMINIUM LOUVERS

REFERENCES

SELECTED PROJECT

SKANSKA

- SALON PORSCHE, VOLKSWAGENA, AUDI, ul. Sekundowa, Warszawa
- Centrum Laboratoryjne Nauk Przyrodniczych UKSW, ul. Wóycickiego, Warszawa
- Centrum Żeglarstwa SŁONECZNA POLANA, ul. Sielska, Olsztyn
- Budynek WFOŚiGW, ul. Dubois, Łódź
- Piekarnia LA LORRAINE, ul. Przemysłowa, Nowy Dwór Mazowiecki
- Budynek mieszkalny APARTAMENTY ZAJĄCZKA, ul. Zajączka, Warszawa
- Budynek biurowy Wylęgarni Drobiu, Stoczek

warbud WARTO BUDOWAĆ

- Budynek ICBN KUL, ul. Konstantynów, Lublin
- Budynek BIOTECHNOLOGIA KUL, ul. Konstantynów, Lublin
- Szpital Kliniczny, ul. Karowa, Warszawa
- Centrum handlowe RENOMA, ul. Świdnicka, Wrocław
- Akademickie Centrum Materiałów i Nanotechnologii AGH, ul. Kawiory, Kraków

budimex

- Budynki mieszkalne MADISON APARTMENTS, ul. Szamocka, Warszawa
- Lubelskie Centrum Konferencyjne LCK, ul. Grottgera, Lublin
- Budynek mieszkalny APARTAMENTY MURANO ETAP III, ul. Pokorna, Warszawa
- Budynek biurowy PZU, Komandorska, Wrocław
- GALERIA KUPIECKA, ul. Staszica, Otwock

STRABAG

- Tunel Wawer, ul. Patriotów, Warszawa
- Parking wielopoziomowy, ul. Sienkiewicza, Pruszków

ERBUD

- Budynek mieszkalny NA SOWIŃSKIEGO, ul. Sowińskiego, Warszawa
- CH TESCO, ul. Fieldorfa, Warszawa
- Centrum handlowe SILESIA CITY CENTER, ul. Chorzowska, Katowice
- Parking CH AGORA, ul. Kwietniewskiego, Bytom

HOCHTIEF

- CENTRUM PRASKIE KONESER, Budynek F, H, O, P, ul. Ząbkowska, Warszawa
- PORT PRASKI, ul. Krowia, Warszawa

UNIBEP

- Budynki mieszkalne MIASTO WOLA ETAP I, II, III, ul. Jana Kazimierza, Warszawa
- Budynek mieszkalny ZIELONE PATIO, ul. Powstańców, Pruszków
- Budynek mieszkalny SŁODOWIEC CITY, ul. Żeromskiego, Warszawa
- Budynek mieszkalny ATELIER ŻOLIBORZ, ul. Przasnyska, Warszawa

FUNDAMENTAL GROUP

- Budynek mieszkalny SPLACE, ul. Rydygiera, Warszawa
- Budynek biurowy, ul. Chmielna, Warszawa
- Budynek mieszkalny, ul. Samochodowa, Warszawa
- Sklepy Shopin i Netto w Łodzi, Płocku, Garwolinie
- Hotel HILTON, ul. Wspólna, Warszawa

IDS BUD

- Budynek biurowo – mieszkalny NORDIC HAVEN, ul. Grottgera, Bydgoszcz
- Centrum Zaawansowanych Materiałów i Technologii CEZAMAT, ul. Poleczki, Warszawa

SPS CONSTRUCTION

- Budynki mieszkalne 19 DZIELNICA ETAP III i IV, ul. Kolejowa, Warszawa
- Budynki mieszkalne BLISKA WOLA ETAP BII, ul. Kasprzaka, Warszawa
- Budynki mieszkalne ATMOSFERA ATELIER, ul. Rzeczypospolitej, Warszawa
- Budynki mieszkalne BULWARY PRASKIE, ul. Jagiellońska, Warszawa

REMEX

- Budynek mieszkalno-usługowy, ul. Piłsudskiego, Mińsk Mazowiecki
- Budynek Gimnazjum, ul. 11tego Listopada, Radzymin
- Hala Sportowa, ul. Budowlana, Mińsk Mazowiecki
- Siedziba firmy Remex, ul. Grobelnego, Mińsk Mazowiecki
- Budynek mieszkalny OSIEDLE NOWOMIŃSKIE, ul. Kozikowskiego, Mińsk Mazowiecki
- MASTERS TENNIS CLUB, ul. Dąbrówki, Mińsk Mazowiecki
- Budynek mieszkalny, ul. Spółdzielcza, Mińsk Mazowiecki

KARMAR
A BOUYGUES CONSTRUCTION COMPANY

- Budynek mieszkalny LA TOUR RESIDENCE, ul. Al. Bohaterów Września, Warszawa
- Budynek mieszkalny METRO BIELANY, ul. Nocznickiego, Warszawa
- Budynek mieszkalny REZYDENCJA NARUSZEWICZA, ul. Naruszewicza, Warszawa
- Budynek mieszkalny MOKKA, ul. Konstruktorska, Warszawa
- Budynek mieszkalny SOLEC RESIDENCE, ul. Solec, Warszawa
- Galeria NOWA STACJA, róg Sienkiewicz i Staszica, Pruszków

Jezierski Business Park
BUDUJEMY Z PRZYSZŁOŚCIĄ

- Budynek mieszkalny PARK ŚWIATOWIDA, ul. Książkowa, Warszawa
- Osiedle domków jednorodzinnych, Bogaczewo

consteel

- Budynek mieszkalny MODUO I i III etap, ul. Cybernetyki, Warszawa

ŁUCZ-BUD Sp. z o.o.

- CENTRUM PRASKIE KONESER, Budynek E2 ul. Ząbkowska, Warszawa
- Budynki mieszkalne APARTAMENTY MARYMONT I i II etap, ul. Lektykarska, Warszawa

ipb

- PORT ŚRÓDLĄDOWY, ul. Chodkiewicza, Iława

- Budynki mieszkalne Krasińskiego Etap I i II, ul. Krasińskiego, Warszawa
- Budynki mieszkalne, ul. Gotycka, Warszawa

- Budynek mieszkalny WOLA TARASY, ul. Obozowa, Warszawa
- Budynek mieszkalny WOLA LIBRE, ul. Obozowa, Warszawa
- Budynek biurowo – usługowy ORANGE OFFICE PARK ETAP III, ul. Klimeckiego, Kraków

- Budynki mieszkalne OSIEDLE HUBERTUS I, IV, V, VI etap, ul. Obrzeżna, Warszawa
- Budynki mieszkalne WOLNE MIASTO, ul. Cedrowa, Gdańsk

- Budynek mieszkalno-usługowy, ul. Nocznickiego, Warszawa

- Budynek mieszkalny, ul. Harfowa, Warszawa
- Budynki mieszkalne MŁYNY KRÓLEWSKIE, ul. Ostroroga, Warszawa

- Budynki mieszkalne NOWE BRÓDNO, ul. Ogińskiego, Warszawa
- Budynek mieszkalny POD PIĄTKAMI, ul. Krochmalna, Warszawa
- Budynek biurowy, ul. Arkuszowa, Warszawa

- Sklep wielobranżowy, Zaścianki
- Budynek biurowy, ul. Szosa Ełcka, Białystok

- Budynek mieszkalny MYSZKOWSKA II, ul. Remiszewska, Warszawa
- Budynek mieszkalny LIPOWA OSTOJA, ul. Lipowa, Pruszków

- Budynek mieszkalny, ul. Dubois, Warszawa

- Zespół budynków mieszkalnych, ul. Wojaczka, Wrocław
- Budynki mieszkalne KĘPA MIESZCZAŃSKA etap I i II, ul. Mieszczańska, Wrocław

- Budynki mieszkalne AVORE etap I i II, ul. Bukowińska, Warszawa

- Budynki mieszkalne ŻOLI ŻOLI, ul. Rydygiera, Warszawa

ARTRYS PROJEKT Sp. z o.o. Sp. k.
ul. Polna 25E, 05-816 Opacz-Kolonia
NIP: 701-033-33-91; REGON: 145993773
www.artrys.pl / info@artrys.pl
Tel. +48 22 631 04 77